FALL CREEK FISH LADDER IMPROVEMENT PLAN

100% DESIGN SUBMITTAL

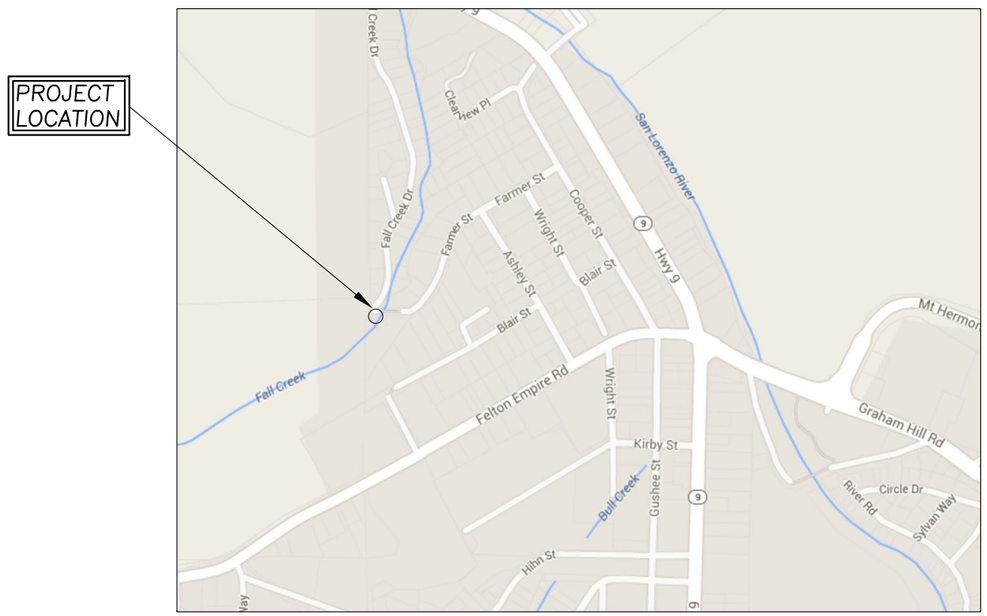

N

VICINITY MAP
N.T.S. (GOOGLE)

PROJECT DESCRIPTION

THESE DRAWINGS PROVIDE DETAILS FOR MODIFICATIONS TO IMPROVE FISH PASSAGE CONDITIONS AT AN EXISTING FISH LADDER, LOCATED AT A SAN LORENZO VALLEY WATER DISTRICT POINT OF DIVERSION ON FALL CREEK IN THE TOWN OF FELTON, SANTA CRUZ COUNTY, CALIFORNIA.

WORK INCLUDES: DEMOLITION AND RECONSTRUCTION OF FISH LADDER WIERS, REMOVAL AND REPLACEMENT OF DIVERSION SCREENS, PIPES, AND CONTROLS, AND ACCESS IMPROVEMENTS FOR ONGOING OPERATIONS AND MAINTENANCE OF THE FACILITIES.

SECTION AND DETAIL CONVENTION

SECTION OR DETAIL IDENTIFICATION (NUMBER OR LETTER)

5
C3

SHEET REFERENCE

GENERAL NOTES

1. TOPOGRAPHIC MAPPING WAS PERFORMED BY:
   WATERWAYS CONSULTING, INC.
   SURVEY DATES; MULTIPLE DAYS IN OCTOBER OF 2013, APRIL OF 2014, OCTOBER 2019, AND APRIL 2020.
2. ELEVATION DATUM: AN ASSUMED ELEVATION OF 100.00' WAS ESTABLISHED AT SURVEY CONTROL POINT #1, A DRILLED HOLE IN CONCRETE SLAB.
3. BASIS OF BEARINGS: BASIS OF BEARINGS BETWEEN POINTS #1 AND #10,000 IS N0°00'00"E, AS SHOWN ON SHT. C2.
4. CONTOUR INTERVAL IS ONE FOOT. ELEVATIONS AND DISTANCES SHOWN ARE IN DECIMAL FEET.
5. THIS IS NOT A BOUNDARY SURVEY. PROPERTY LINES, IF SHOWN, WERE COMPILED FROM RECORD INFORMATION AND FROM FIELD TIES TO EXISTING BOUNDARY MONUMENTATION. THE LOCATION OF THESE LINES IS SUBJECT TO CHANGE, PENDING THE RESULTS OF A COMPLETE BOUNDARY SURVEY.

* CALL BEFORE YOU DIG *

CONTACT UNDERGROUND SERVICE ALERT (USA)
PRIOR TO ANY CONSTRUCTION WORK 1-800-227-2600

ABBREVIATIONS

AVG.	AVERAGE
CC	CONCRETE
CY	CUBIC YARDS
DIA.	DIAMETER
E	EXISTING
E.G.	EXISTING GROUND
ELEV.	ELEVATION
DI	DRAINAGE INLET
FG	FINISHED GRADE
FT	FEET
INV	INVERT
N	NEW
N.T.S.	NOT TO SCALE
O.C.	ON CENTER
O.D.	RELATIVE COMPACTION
RSP	ROCK SLOPE PROTECTION
SPK	SPIKE
SQ.FT.	SQUARE FOOT
T	TREE
T.B.D.	TO BE DETERMINED
TYP	TYPICAL
UNK	UNKNOWN
WSE	WATER SURFACE ELEVATION
YR	YEAR

TREE SPECIES

A	ALDER
BAY	BAY
BM	BIGLEAF MAPLE
F	FIR
M	MAPLE
MAD	MADRONE
O	OAK
P	PINE
R	REDWOOD
T	TREE (SPECIES UNKNOWN)
W	WILLOW

NRCS SPECIFICATIONS

SPECIFICATIONS	CODE
AQUATIC ORGANISM PASSAGE	396
CONCRETE 4,000 PSI	901
EARTHIFILL	903
GEOTEXTILE FABRIC	905
ROCK RIPRAP	907
CONTROL OF WATER	909

TO THE BEST OF MY PROFESSIONAL KNOWLEDGE, JUDGMENT, AND BELIEF, THESE PLANS MEET APPLICABLE NRCS STANDARDS AND SPECIFICATIONS AND PRACTICE REQUIREMENTS.

PLAN SET INDEX

1	C1	COVER
2	C2	SITE PLAN OVERVIEW
3	C3	SITE PLAN AT FISH LADDER
4	C4	ACCESS AND RAILING PLAN
5	C5	CHANNEL PROFILES
6	C6	TYPICAL SECTIONS (1 OF 4)
7	C7	TYPICAL SECTIONS (2 OF 4)
8	C8	TYPICAL SECTIONS (3 OF 4)
9	C9	TYPICAL SECTIONS (4 OF 4)
10	C10	EXISTING CONDITIONS SITE PLAN
11	C11	DEMOLITION PLAN
12	C12	TEMPORARY ACCESS, EROSION CONTROL. AND DIVERSION PLAN
13	C13	DETAILS
14	C14	PUMP STATION IMPROVEMENTS PLAN
15	C15	PUMP STATION DETAILS
16	C16	WATERLINE IMPROVEMENTS PLAN
17	C17	PUMP STATION SECTION
18	C18	GENERAL NOTES AND DETAILS
19	E1	ELECTRICAL ABBREVIATIONS AND SYMBOLS
20	E2	SINGLE LINE DIAGRAM
21	E3	UTILITY METER AND MCC ELEVATION
22	E4	ELECTRICAL SITE PLAN
23	E5	CONTROL WIRING DIAGRAMS
24	E6	CONDUIT AND CABLE SCHED., PLC I/O LIST
25	E7	CONTROL PANEL SCHEMATICS
26	E8	NETWORK DIAGRAMS
27	E9	ELECTRICAL DETAILS–1
28	E10	ELECTRICAL DETAILS–2
29	SO	STRUCTURAL NOTES, SPECIFICATIONS, & TYPICAL DETAILS
30	S1	DETAILS
31	S2	WALL DETAILS
32	S3	ACCESS STAIR PLANS
33	S4	ACCESS STAIR DETAILS

WATERWAYS CONSULTING INC.
509A SWIFT ST.
SANTA CRUZ, CA 95060
PH:(831)421-9291 // FAX:(888)819-6847
WWW.WATWAYS.COM

9/9/22
DATE

REGISTERED PROFESSIONAL ENGINEER MATT W. WELD No. 62235 Exp. 9-30-23 CIVIL STATE OF CALIFORNIA

MATT W. WELD

PREPARED AT THE REQUEST OF:
SAN LORENZO VALLEY WATER DISTRICT

COVER

FALL CREEK FISH LADDER IMPROVEMENT PLAN
100% DESIGN SUBMITTAL

DESIGNED BY: M.W.
DRAWN BY: C.H.
CHECKED BY: M.W.
DATE: 09-09-22
JOB NO.: 13-054

BAR IS ONE INCH ON ORIGINAL DRAWING, ADJUST SCALES FOR REDUCED PLOTS
0 1"

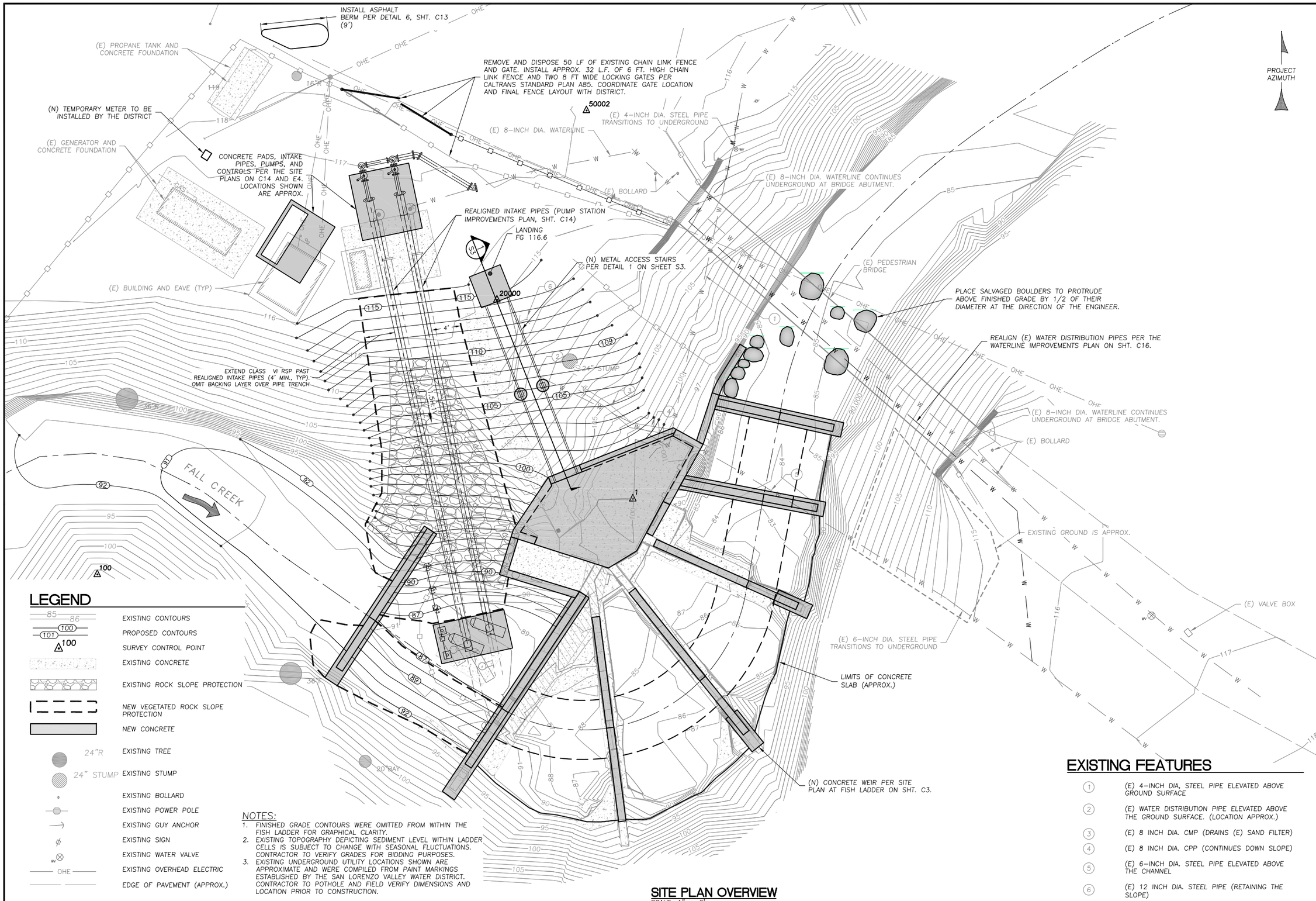

LEGEND

- EXISTING CONTOURS
- PROPOSED CONTOURS
- SURVEY CONTROL POINT
- EXISTING CONCRETE
- EXISTING ROCK SLOPE PROTECTION
- NEW VEGETATED ROCK SLOPE PROTECTION
- NEW CONCRETE
- EXISTING TREE
- EXISTING STUMP
- EXISTING BOLLARD
- EXISTING POWER POLE
- EXISTING GUY ANCHOR
- EXISTING SIGN
- EXISTING WATER VALVE
- EXISTING OVERHEAD ELECTRIC
- EDGE OF PAVEMENT (APPROX.)

NOTES:

1. FINISHED GRADE CONTOURS WERE OMITTED FROM WITHIN THE FISH LADDER FOR GRAPHICAL CLARITY.
2. EXISTING TOPOGRAPHY DEPICTING SEDIMENT LEVEL WITHIN LADDER CELLS IS SUBJECT TO CHANGE WITH SEASONAL FLUCTUATIONS. CONTRACTOR TO VERIFY GRADES FOR BIDDING PURPOSES.
3. EXISTING UNDERGROUND UTILITY LOCATIONS SHOWN ARE APPROXIMATE AND WERE COMPILED FROM PAINT MARKINGS ESTABLISHED BY THE SAN LORENZO VALLEY WATER DISTRICT. CONTRACTOR TO POTHOLE AND FIELD VERIFY DIMENSIONS AND LOCATION PRIOR TO CONSTRUCTION.

SITE PLAN OVERVIEW

SCALE: 1" = 6'

EXISTING FEATURES

1. (E) 4-INCH DIA. STEEL PIPE ELEVATED ABOVE GROUND SURFACE
2. (E) WATER DISTRIBUTION PIPE ELEVATED ABOVE THE GROUND SURFACE. (LOCATION APPROX.)
3. (E) 8 INCH DIA. CMP (DRAINS (E) SAND FILTER)
4. (E) 8 INCH DIA. CPP (CONTINUES DOWN SLOPE)
5. (E) 6-INCH DIA. STEEL PIPE ELEVATED ABOVE THE CHANNEL
6. (E) 12 INCH DIA. STEEL PIPE (RETAINING THE SLOPE)

WATERWAYS CONSULTING INC.
509A SWIFT ST.
SANTA CRUZ, CA 95060
PH:(831)421-9291 // FAX:(888)819-6847
WWW.WATWAYS.COM

9/9/22
DATE

REGISTERED PROFESSIONAL ENGINEER MATT W. WELD No. 62235 Exp. 9-30-23 CIVIL STATE OF CALIFORNIA

MATT W. WELD

PREPARED AT THE REQUEST OF:

SAN LORENZO VALLEY WATER DISTRICT

SITE PLAN OVERVIEW

FALL CREEK FISH LADDER IMPROVEMENT PLAN 100% DESIGN SUBMITTAL

DESIGNED BY:	M.W.
DRAWN BY:	C.H.
CHECKED BY:	M.W.
DATE:	09-09-22
JOB NO.:	13-054

BAR IS ONE INCH ON ORIGINAL DRAWING, ADJUST SCALES FOR REDUCED PLOTS

0 1"

C2

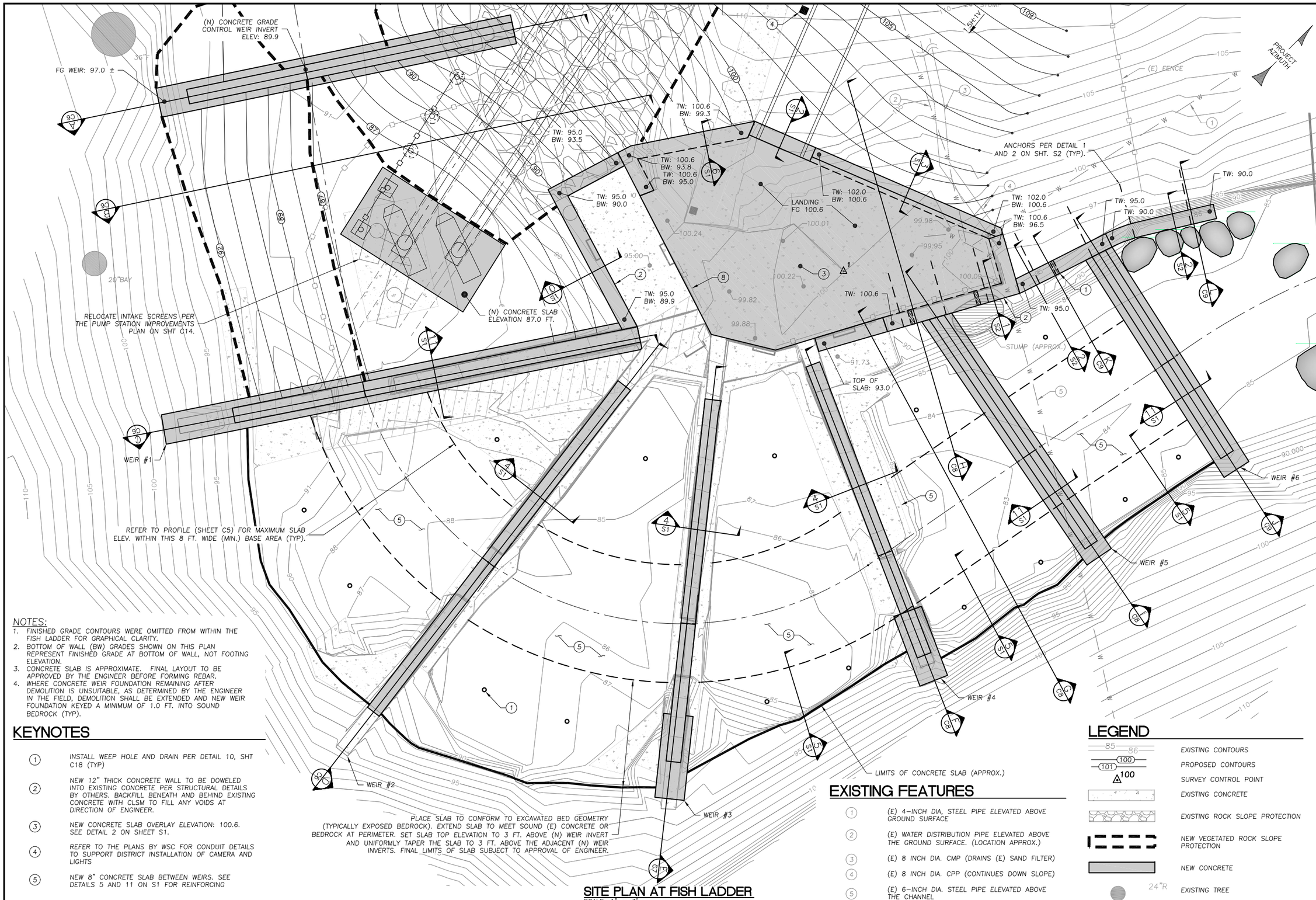

NOTES:

1. FINISHED GRADE CONTOURS WERE OMITTED FROM WITHIN THE FISH LADDER FOR GRAPHICAL CLARITY.
2. BOTTOM OF WALL (BW) GRADES SHOWN ON THIS PLAN REPRESENT FINISHED GRADE AT BOTTOM OF WALL, NOT FOOTING ELEVATION.
3. CONCRETE SLAB IS APPROXIMATE. FINAL LAYOUT TO BE APPROVED BY THE ENGINEER BEFORE FORMING REBAR.
4. WHERE CONCRETE WEIR FOUNDATION REMAINING AFTER DEMOLITION IS UNSUITABLE, AS DETERMINED BY THE ENGINEER IN THE FIELD, DEMOLITION SHALL BE EXTENDED AND NEW WEIR FOUNDATION KEYED A MINIMUM OF 1.0 FT. INTO SOUND BEDROCK (TYP).

KEYNOTES

1. INSTALL WEEP HOLE AND DRAIN PER DETAIL 10, SHT C18 (TYP)
2. NEW 12" THICK CONCRETE WALL TO BE DOWELED INTO EXISTING CONCRETE PER STRUCTURAL DETAILS BY OTHERS. BACKFILL BENEATH AND BEHIND EXISTING CONCRETE WITH CLSM TO FILL ANY VOIDS AT DIRECTION OF ENGINEER.
3. NEW CONCRETE SLAB OVERLAY ELEVATION: 100.6. SEE DETAIL 2 ON SHEET S1.
4. REFER TO THE PLANS BY WSC FOR CONDUIT DETAILS TO SUPPORT DISTRICT INSTALLATION OF CAMERA AND LIGHTS
5. NEW 8" CONCRETE SLAB BETWEEN WEIRS. SEE DETAILS 5 AND 11 ON S1 FOR REINFORCING

SITE PLAN AT FISH LADDER

SCALE: 1" = 3'

EXISTING FEATURES

1. (E) 4-INCH DIA. STEEL PIPE ELEVATED ABOVE GROUND SURFACE
2. (E) WATER DISTRIBUTION PIPE ELEVATED ABOVE THE GROUND SURFACE. (LOCATION APPROX.)
3. (E) 8 INCH DIA. CMP (DRAINS (E) SAND FILTER)
4. (E) 8 INCH DIA. CPP (CONTINUES DOWN SLOPE)
5. (E) 6-INCH DIA. STEEL PIPE ELEVATED ABOVE THE CHANNEL

LEGEND

- 85 / 86 — EXISTING CONTOURS
- 100 / 101 — PROPOSED CONTOURS
- 100 — SURVEY CONTROL POINT
- EXISTING CONCRETE
- EXISTING ROCK SLOPE PROTECTION
- NEW VEGETATED ROCK SLOPE PROTECTION
- NEW CONCRETE
- 24"R — EXISTING TREE

WATERWAYS CONSULTING INC.
509A SWIFT ST.
SANTA CRUZ, CA 95060
PH:(831)421-9291 // FAX:(888)819-6847
WWW.WATWAYS.COM

DATE 9/9/22

REGISTERED PROFESSIONAL ENGINEER MATT W. WELD No. 62235 Exp. 9-30-23 CIVIL STATE OF CALIFORNIA

MATT W. WELD

PREPARED AT THE REQUEST OF:

SAN LORENZO VALLEY WATER DISTRICT

SITE PLAN AT FISH LADDER

FALL CREEK FISH LADDER IMPROVEMENT PLAN
100% DESIGN SUBMITTAL

DESIGNED BY:	M.W.
DRAWN BY:	C.H.
CHECKED BY:	M.W.
DATE:	09-09-22
JOB NO.:	13-054

BAR IS ONE INCH ON ORIGINAL DRAWING, ADJUST SCALES FOR REDUCED PLOTS

0 — 1"

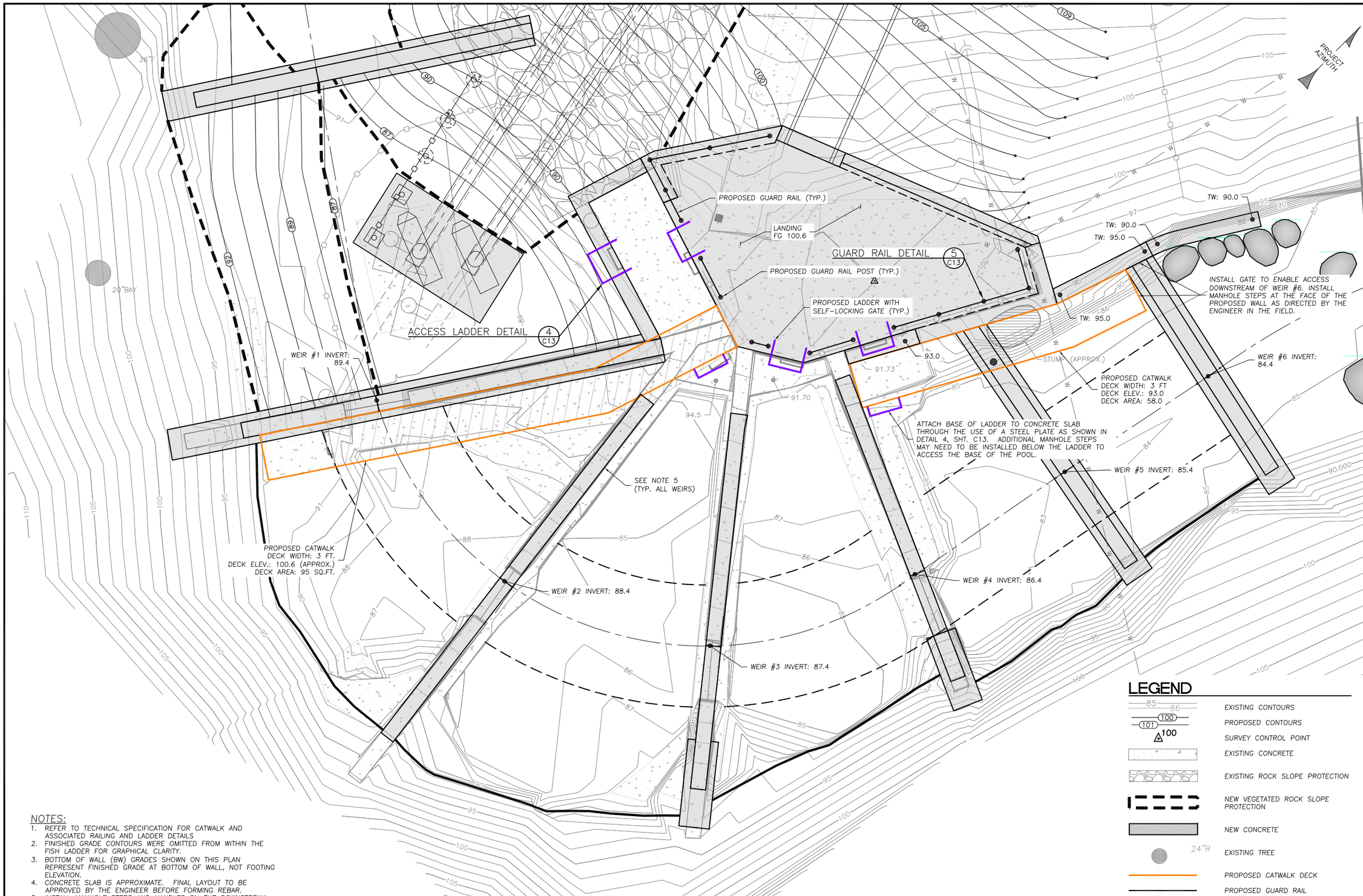

ACCESS AND RAILING PLAN

SCALE: 1" = 3'

LEGEND

- EXISTING CONTOURS
- PROPOSED CONTOURS
- SURVEY CONTROL POINT
- EXISTING CONCRETE
- EXISTING ROCK SLOPE PROTECTION
- NEW VEGETATED ROCK SLOPE PROTECTION
- NEW CONCRETE
- EXISTING TREE
- PROPOSED CATWALK DECK
- PROPOSED GUARD RAIL
- PROPOSED GUARD RAIL POST
- PROPOSED LADDER WITH SELF-LOCKING GATE

NOTES:

1. REFER TO TECHNICAL SPECIFICATION FOR CATWALK AND ASSOCIATED RAILING AND LADDER DETAILS
2. FINISHED GRADE CONTOURS WERE OMITTED FROM WITHIN THE FISH LADDER FOR GRAPHICAL CLARITY.
3. BOTTOM OF WALL (BW) GRADES SHOWN ON THIS PLAN REPRESENT FINISHED GRADE AT BOTTOM OF WALL, NOT FOOTING ELEVATION.
4. CONCRETE SLAB IS APPROXIMATE. FINAL LAYOUT TO BE APPROVED BY THE ENGINEER BEFORE FORMING REBAR.
5. INSTALL MANHOLE STEPS AND HANDLES ON THE DOWNSTREAM FACE OF ALL WEIRS PER THE LAYOUT ON DETAIL 1, SHT. C9.

WATERWAYS CONSULTING INC.
509A SWIFT ST.
SANTA CRUZ, CA 95060
PH:(831)421-9291 // FAX:(888)819-6847
WWW.WATWAYS.COM

DATE 9/9/22

REGISTERED PROFESSIONAL ENGINEER MATT W. WELD No. 62235 Exp. 9-30-23 CIVIL STATE OF CALIFORNIA

MATT W. WELD

PREPARED AT THE REQUEST OF:

SAN LORENZO VALLEY WATER DISTRICT

ACCESS AND RAILING PLAN

FALL CREEK FISH LADDER IMPROVEMENT PLAN 100% DESIGN SUBMITTAL

DESIGNED BY:	M.W.
DRAWN BY:	C.H.
CHECKED BY:	M.W.
DATE:	09-09-22
JOB NO.:	13-054

BAR IS ONE INCH ON ORIGINAL DRAWING, ADJUST SCALES FOR REDUCED PLOTS

0 1"

C4

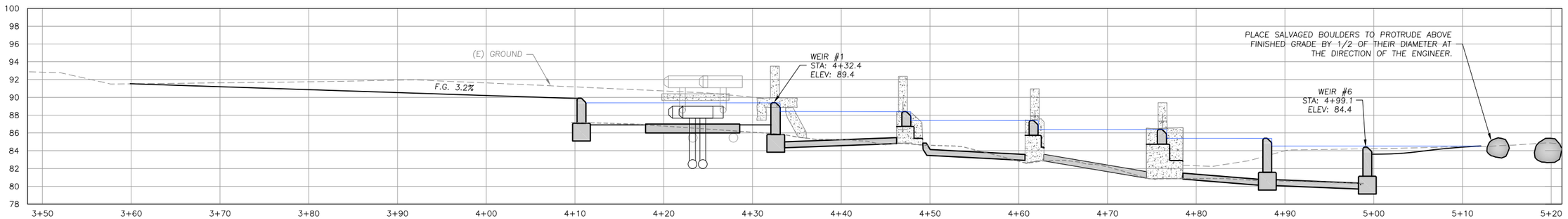

CHANNEL LONG PROFILE

SCALE: 1" = 6'

NOTES:

1. WHERE CONCRETE WEIR FOUNDATION REMAINING AFTER DEMOLITION IS UNSUITABLE, AS DETERMINED BY THE ENGINEER IN THE FIELD, DEMOLITION SHALL BE EXTENDED AND NEW WEIR FOUNDATION KEYED A MINIMUM OF 1.0 FT. INTO SOUND BEDROCK (TYP).
2. TOP OF SLAB ELEVATIONS ARE A MAXIMUM. TOP OF SLAB ELEVATIONS CAN BE LOWERED TO CONFORM TO BEDROCK GEOMETRY.

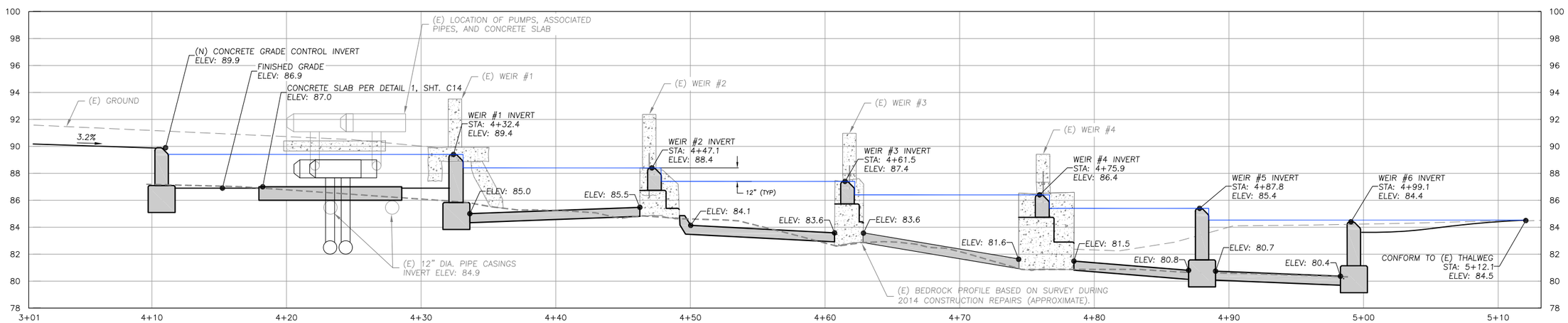

FISHWAY PROFILE

SCALE: 1" = 4'

WATERWAYS CONSULTING INC.
509A SWIFT ST.
SANTA CRUZ, CA 95060
PH:(831)421-9291 // FAX:(888)819-6847
WWW.WATWAYS.COM

9/9/22
DATE

REGISTERED PROFESSIONAL ENGINEER
MATT W. WELD
No. 62235
Exp. 9-30-23
CIVIL
STATE OF CALIFORNIA

MATT W. WELD

PREPARED AT THE REQUEST OF:

SAN LORENZO VALLEY WATER DISTRICT

CHANNEL PROFILES

FALL CREEK FISH LADDER IMPROVEMENT PLAN
100% DESIGN SUBMITTAL

DESIGNED BY:	M.W.
DRAWN BY:	C.H.
CHECKED BY:	M.W.
DATE:	09-09-22
JOB NO.:	13-054

BAR IS ONE INCH ON ORIGINAL DRAWING, ADJUST SCALES FOR REDUCED PLOTS

0 1"

C5

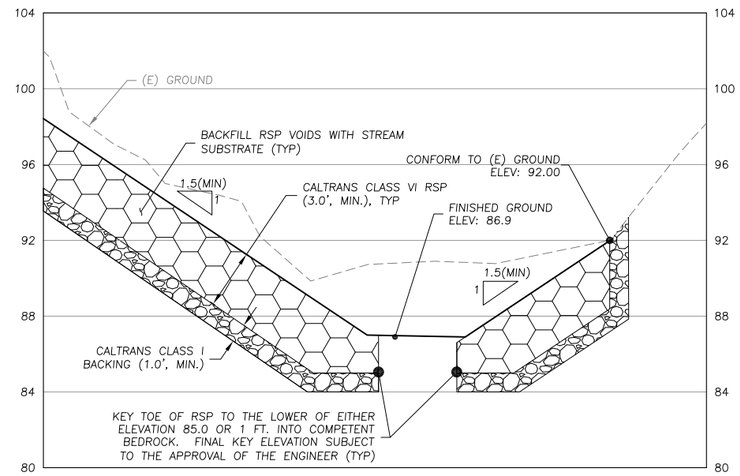

SECTION DOWNSTREAM OF CONCRETE GRADE CONTROL WEIR

SCALE: 1" = 4'

B / C3

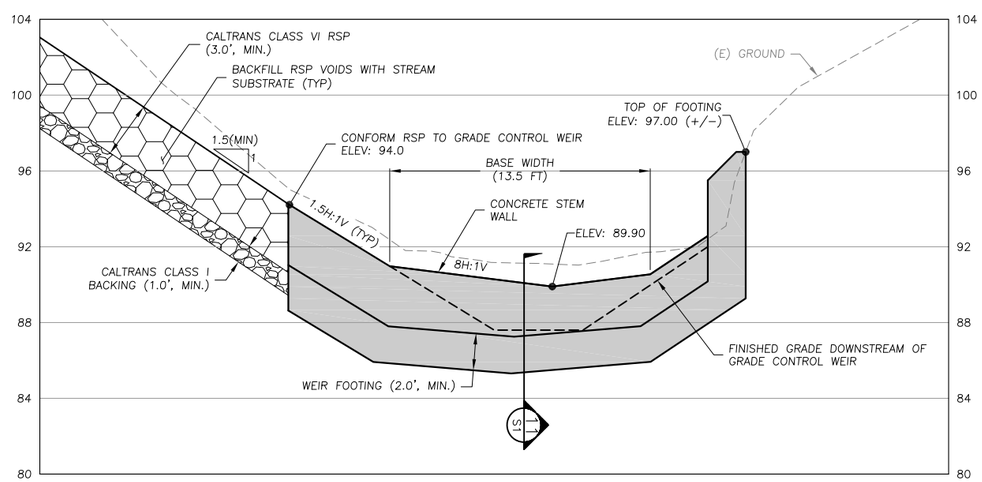

SECTION AT CONCRETE GRADE CONTROL WEIR

SCALE: 1" = 4'

A / C3

WATERWAYS CONSULTING INC.
509A SWIFT ST.
SANTA CRUZ, CA 95060
PH:(831)421-9291 // FAX:(888)819-6847
WWW.WATWAYS.COM

9/9/22
DATE

REGISTERED PROFESSIONAL ENGINEER
MATT W. WELD
No. 62235
Exp. 9-30-23
CIVIL
STATE OF CALIFORNIA

MATT W. WELD

PREPARED AT THE REQUEST OF:

SAN LORENZO VALLEY WATER DISTRICT

TYPICAL SECTIONS (1 OF 4)

FALL CREEK FISH LADDER IMPROVEMENT PLAN
100% DESIGN SUBMITTAL

DESIGNED BY:	M.W.
DRAWN BY:	C.H.
CHECKED BY:	M.W.
DATE:	09-09-22
JOB NO.:	13-054

BAR IS ONE INCH ON ORIGINAL DRAWING, ADJUST SCALES FOR REDUCED PLOTS

0 1"

C6

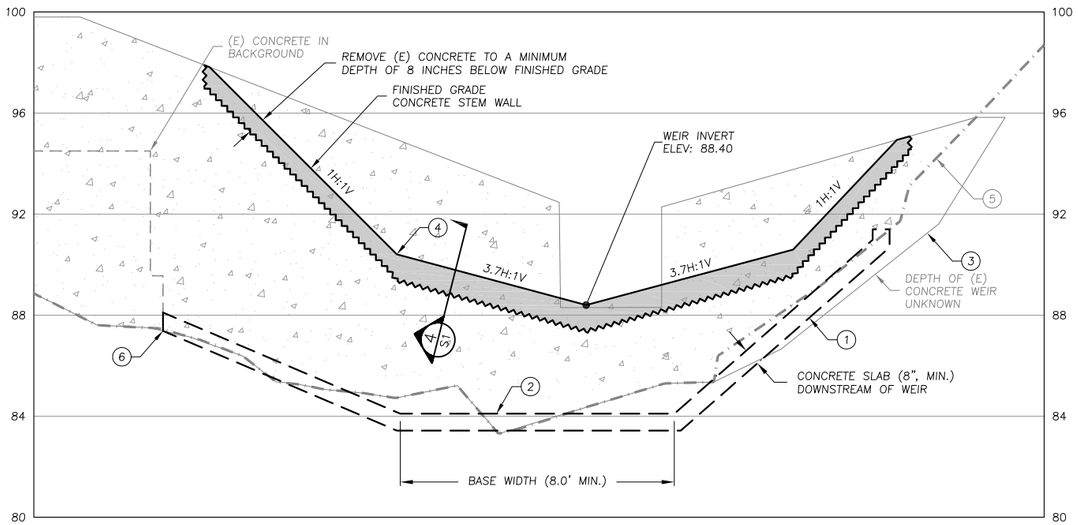

WEIR #2 SECTION

SCALE: 1" = 3'

D / C3

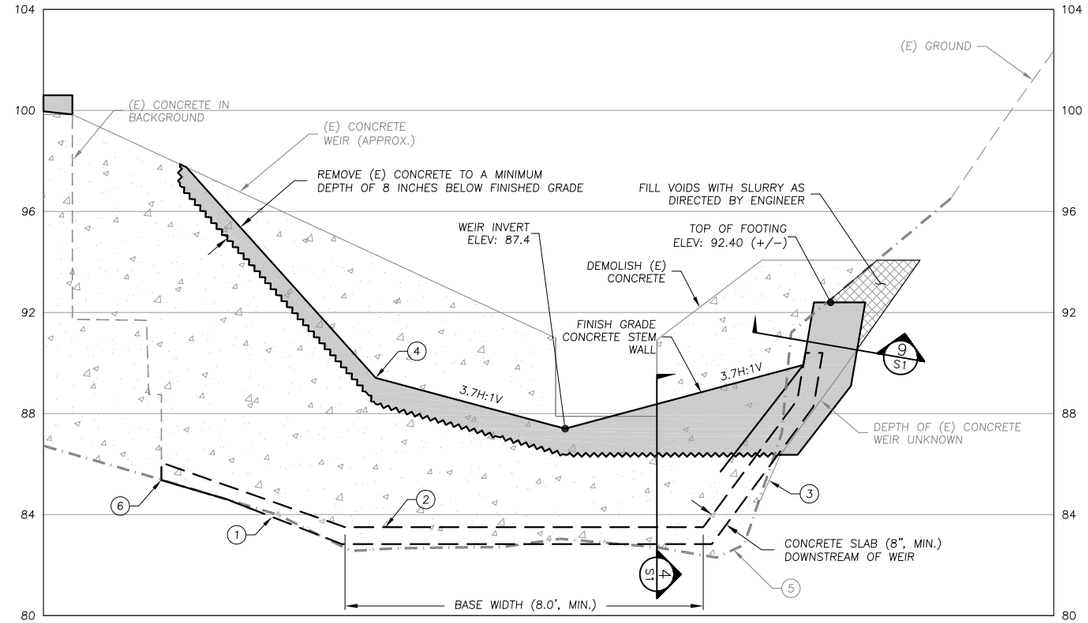

WEIR #3 SECTION

SCALE: 1" = 3'

E / C3

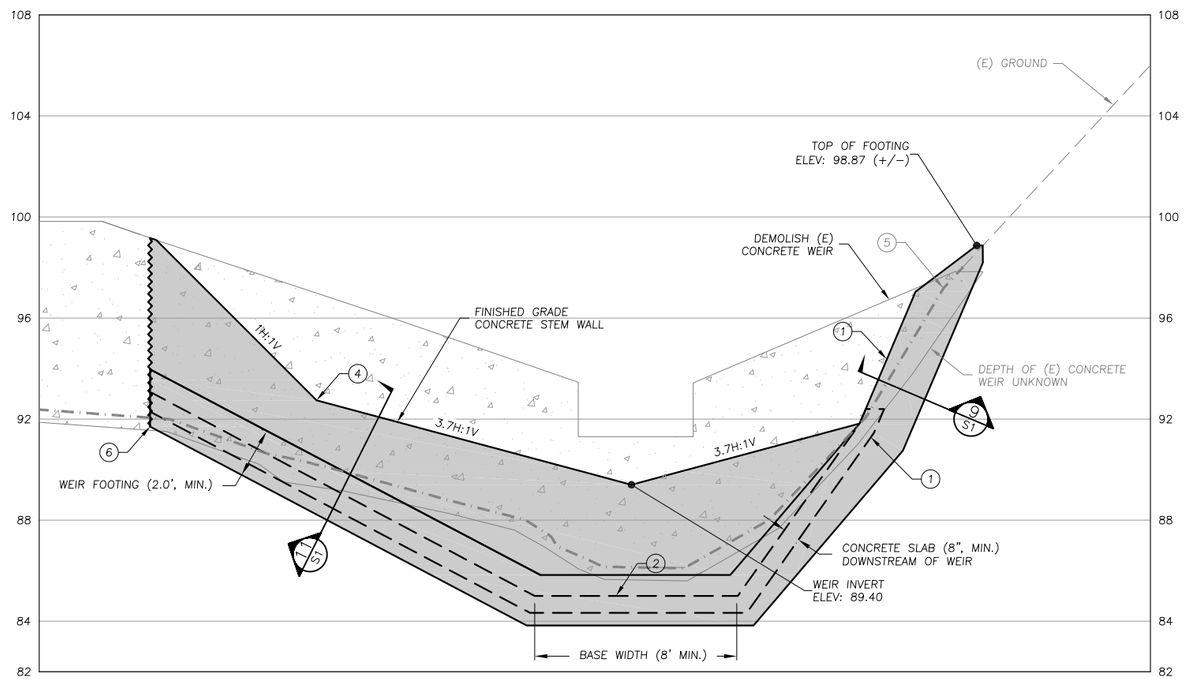

WEIR #1 SECTION

SCALE: 1" = 3'

C / C3

KEYNOTES:

1. COVER ENTIRE BASE OF CHANNEL (BETWEEN WEIRS) WITH CONCRETE SLAB. FINAL LIMITS OF SLAB SUBJECT TO APPROVAL OF ENGINEER. SET SLAB TOP ELEVATION AT BANKS TO 3 FT. ABOVE (N) WEIR INVERT AND UNIFORMLY TAPER THE SLAB TO 3 FT. ABOVE THE ADJACENT (N) WEIR INVERTS.
2. CONCRETE SLAB BASE ELEVATIONS WITHIN CENTER 8 FT WIDTH MUST CONFORM TO DESIGN FISHWAY PROFILE, SHEET C5.
3. WHERE CONCRETE WEIR FOUNDATION REMAINING AFTER DEMOLITION IS UNSUITABLE, AS DETERMINED BY THE ENGINEER IN THE FIELD, DEMOLITION SHALL BE EXTENDED AND NEW WEIR FOUNDATION KEYED A MINIMUM OF 1.0 FT. INTO SOUND BEDROCK (TYP).
4. MAINTAIN SHALLOW WEIR CREST (3.7H:1V) FOR A MINIMUM OF 7.5 FT. ON EACH SIDE OF THE WEIR INVERT.
5. APPROXIMATE DEPTH OF BEDROCK BASED ON SURVEY DURING 2014 CONSTRUCTION REPAIRS.
6. CONFORM TO EXISTING OR PROPOSED CONCRETE WALL.

WATERWAYS CONSULTING INC.
509A SWIFT ST.
SANTA CRUZ, CA 95060
PH:(831)421-9291 // FAX:(888)819-6847
WWW.WATWAYS.COM

9/9/22 DATE

REGISTERED PROFESSIONAL ENGINEER MATT W. WELD No. 62235 Exp. 9-30-23 CIVIL STATE OF CALIFORNIA

MATT W. WELD

PREPARED AT THE REQUEST OF:

SAN LORENZO VALLEY WATER DISTRICT

TYPICAL SECTIONS (2 of 4)

FALL CREEK FISH LADDER IMPROVEMENT PLAN 100% DESIGN SUBMITTAL

DESIGNED BY:	M.W.
DRAWN BY:	C.H.
CHECKED BY:	M.W.
DATE:	09-09-22
JOB NO.:	13-054

BAR IS ONE INCH ON ORIGINAL DRAWING, ADJUST SCALES FOR REDUCED PLOTS

0 1"

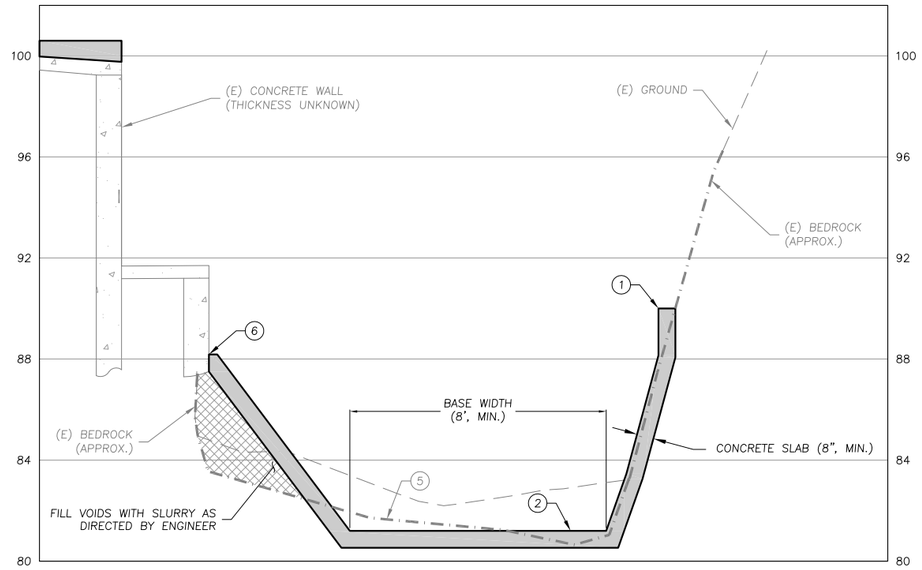

POOL SECTION

SCALE: 1" = 3'

G / C3

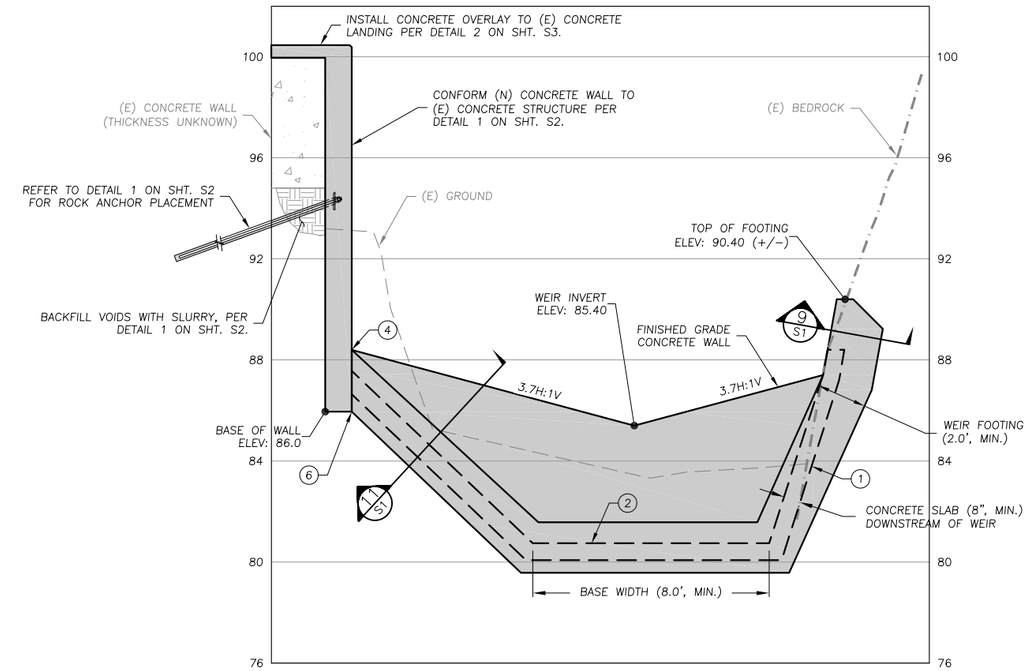

WEIR #5 SECTION

SCALE: 1" = 3'

I / C3

KEYNOTES:

1. COVER ENTIRE BASE OF CHANNEL (BETWEEN WEIRS) WITH CONCRETE SLAB. FINAL LIMITS OF SLAB SUBJECT TO APPROVAL OF ENGINEER. SET SLAB TOP ELEVATION AT BANKS TO 3 FT. ABOVE (N) WEIR INVERT AND UNIFORMLY TAPER THE SLAB TO 3 FT. ABOVE THE ADJACENT (N) WEIR INVERTS.
2. CONCRETE SLAB BASE ELEVATIONS WITHIN CENTER 8 FT WIDTH MUST CONFORM TO DESIGN FISHWAY PROFILE, SHEET C5.
3. WHERE CONCRETE WEIR FOUNDATION REMAINING AFTER DEMOLITION IS UNSUITABLE, AS DETERMINED BY THE ENGINEER IN THE FIELD, DEMOLITION SHALL BE EXTENDED AND NEW WEIR FOUNDATION KEYED A MINIMUM OF 1.0 FT. INTO SOUND BEDROCK (TYP).
4. MAINTAIN SHALLOW WEIR CREST (3.7H:1V) FOR A MINIMUM OF 7.5 FT. ON EACH SIDE OF THE WEIR INVERT.
5. APPROXIMATE DEPTH OF BEDROCK BASED ON SURVEY DURING 2014 CONSTRUCTION REPAIRS.
6. CONFORM TO EXISTING OR PROPOSED CONCRETE WALL.

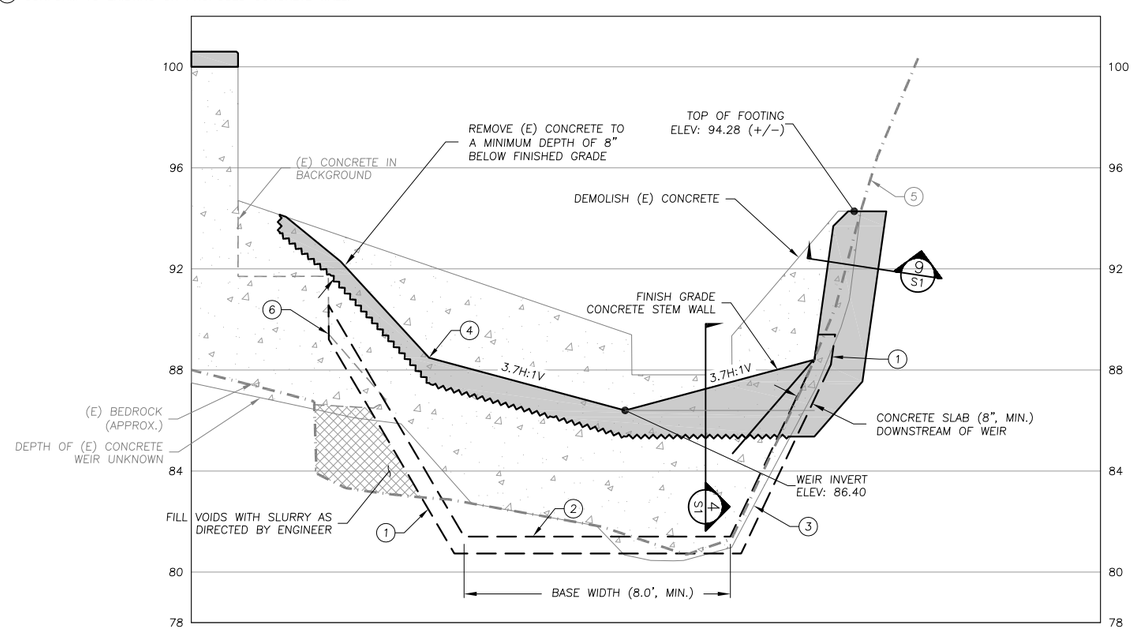

WEIR #4 SECTION

SCALE: 1" = 3'

F / C3

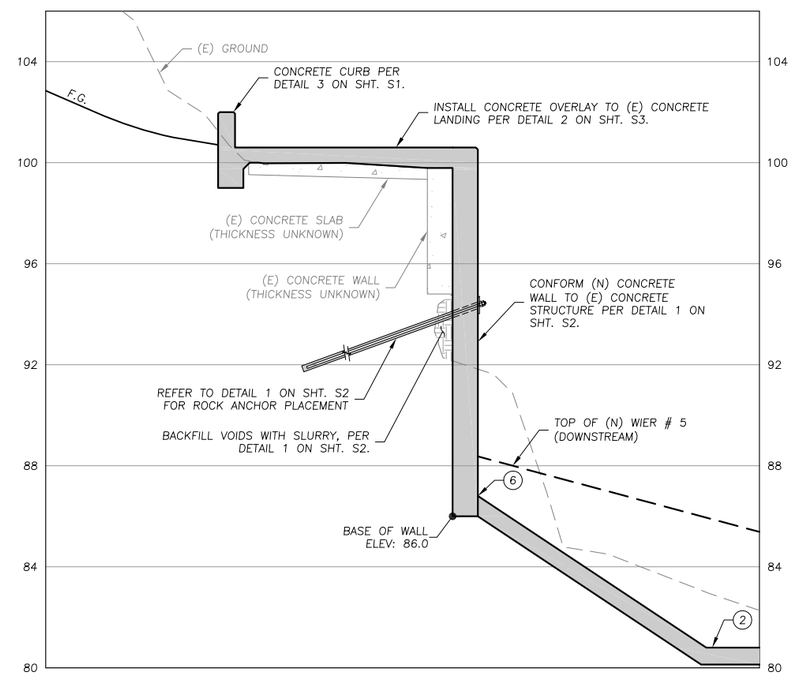

SECTION AT CONCRETE SLAB

SCALE: 1" = 3'

H / C3

WATERWAYS CONSULTING INC.
509A SWIFT ST.
SANTA CRUZ, CA 95060
PH:(831)421-9291 // FAX:(888)819-6847
WWW.WATWAYS.COM

9/9/22
DATE

REGISTERED PROFESSIONAL ENGINEER MATT W. WELD No. 62235 Exp. 9-30-23 CIVIL STATE OF CALIFORNIA

MATT W. WELD

PREPARED AT THE REQUEST OF:

SAN LORENZO VALLEY WATER DISTRICT

TYPICAL SECTIONS (3 of 4)

FALL CREEK FISH LADDER IMPROVEMENT PLAN 100% DESIGN SUBMITTAL

DESIGNED BY:	M.W.
DRAWN BY:	C.H.
CHECKED BY:	M.W.
DATE:	09-09-22
JOB NO.:	13-054

BAR IS ONE INCH ON ORIGINAL DRAWING, ADJUST SCALES FOR REDUCED PLOTS

0 1"

C8

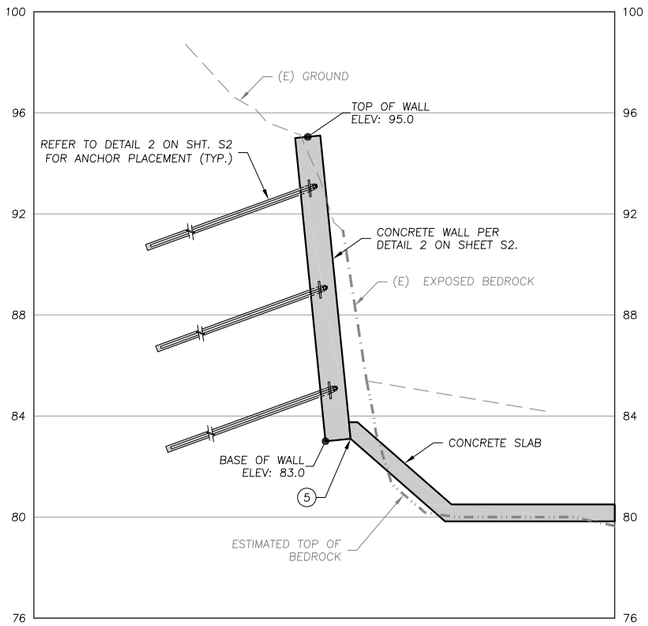

SECTION K / C3
SCALE: 1" = 3'

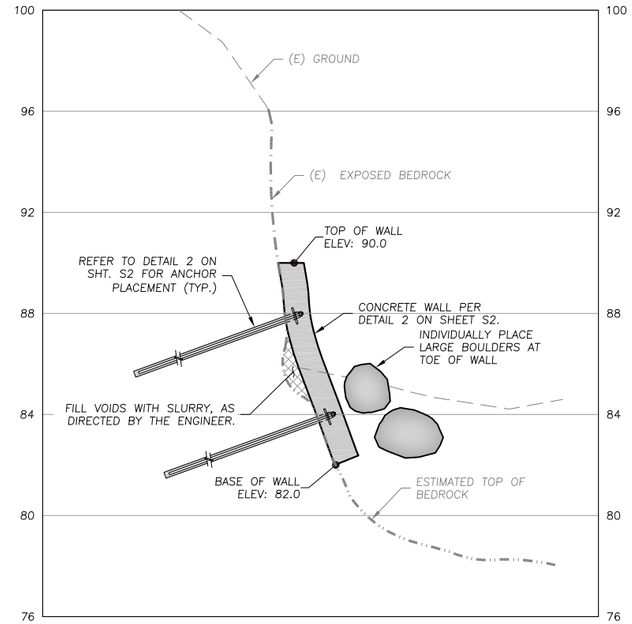

SECTION L / C3
SCALE: 1" = 3'

NOTES:

1. COVER ENTIRE BASE OF CHANNEL (BETWEEN WEIRS) WITH CONCRETE SLAB. FINAL LIMITS OF SLAB SUBJECT TO APPROVAL OF ENGINEER. SET SLAB TOP ELEVATION AT BANKS TO 3 FT. ABOVE (N) WEIR INVERT AND UNIFORMLY TAPER THE SLAB TO 3 FT. ABOVE THE ADJACENT (N) WEIR INVERTS.
2. CONCRETE SLAB BASE ELEVATIONS WITHIN CENTER 8 FT WIDTH MUST CONFORM TO DESIGN FISHWAY PROFILE, SHEET C5.
3. MAINTAIN SHALLOW WEIR CREST (3.7H:1V) FOR A MINIMUM OF 7.5 FT. ON EACH SIDE OF THE WEIR INVERT.
4. APPROXIMATE DEPTH OF BEDROCK BASED ON SURVEY DURING 2014 CONSTRUCTION REPAIRS.
5. CONFORM TO EXISTING OR PROPOSED CONCRETE WALL.

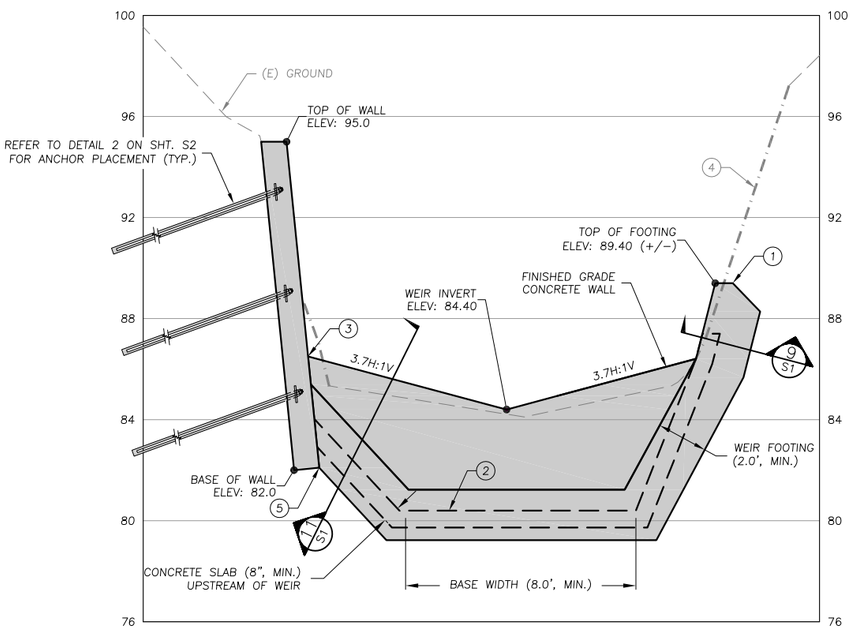

WEIR #6 SECTION J / C3
SCALE: 1" = 3'

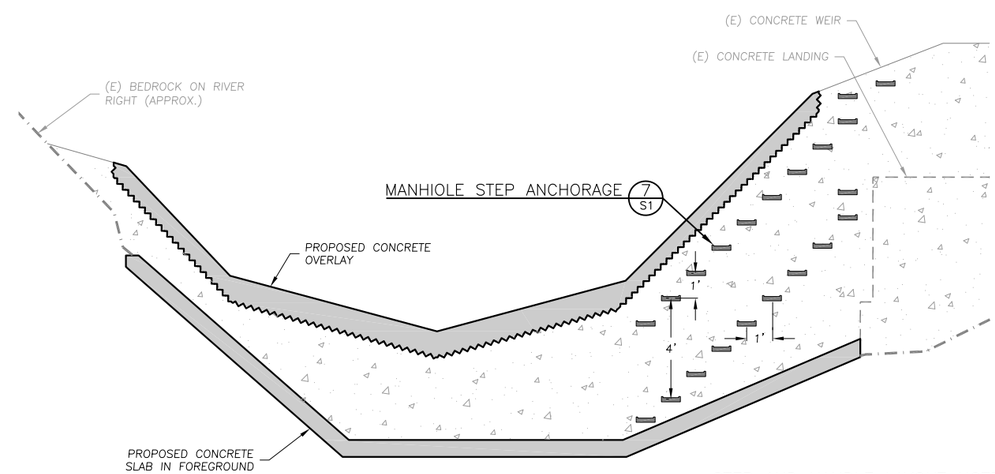

STEP AND HANDLE LAYOUT NOTES:
SCHEMATIC LAYOUT TO PROVIDE STEP AND HANDLE INSTALLATION CRITERIA. FINAL LAYOUT OF STEPS AND HANDLES TO BE DETERMINED BY THE ENGINEER IN THE FIELD.

WEIR STEP AND HANDLE LAYOUT DETAIL 1 / C4
SCALE: 1" = 3'

WATERWAYS CONSULTING INC.
509A SWIFT ST.
SANTA CRUZ, CA 95060
PH:(831)421-9291 // FAX:(888)819-6847
WWW.WATWAYS.COM

9/9/22
DATE

REGISTERED PROFESSIONAL ENGINEER
MATT W. WELD
No. 62235
Exp. 9-30-23
CIVIL
STATE OF CALIFORNIA

MATT W. WELD

PREPARED AT THE REQUEST OF:
SAN LORENZO VALLEY WATER DISTRICT

TYPICAL SECTIONS (4 OF 4)

FALL CREEK FISH LADDER IMPROVEMENT PLAN
100% DESIGN SUBMITTAL

DESIGNED BY:	M.W.
DRAWN BY:	C.H.
CHECKED BY:	M.W.
DATE:	09-09-22
JOB NO.:	13-054

BAR IS ONE INCH ON ORIGINAL DRAWING, ADJUST SCALES FOR REDUCED PLOTS
0 1"

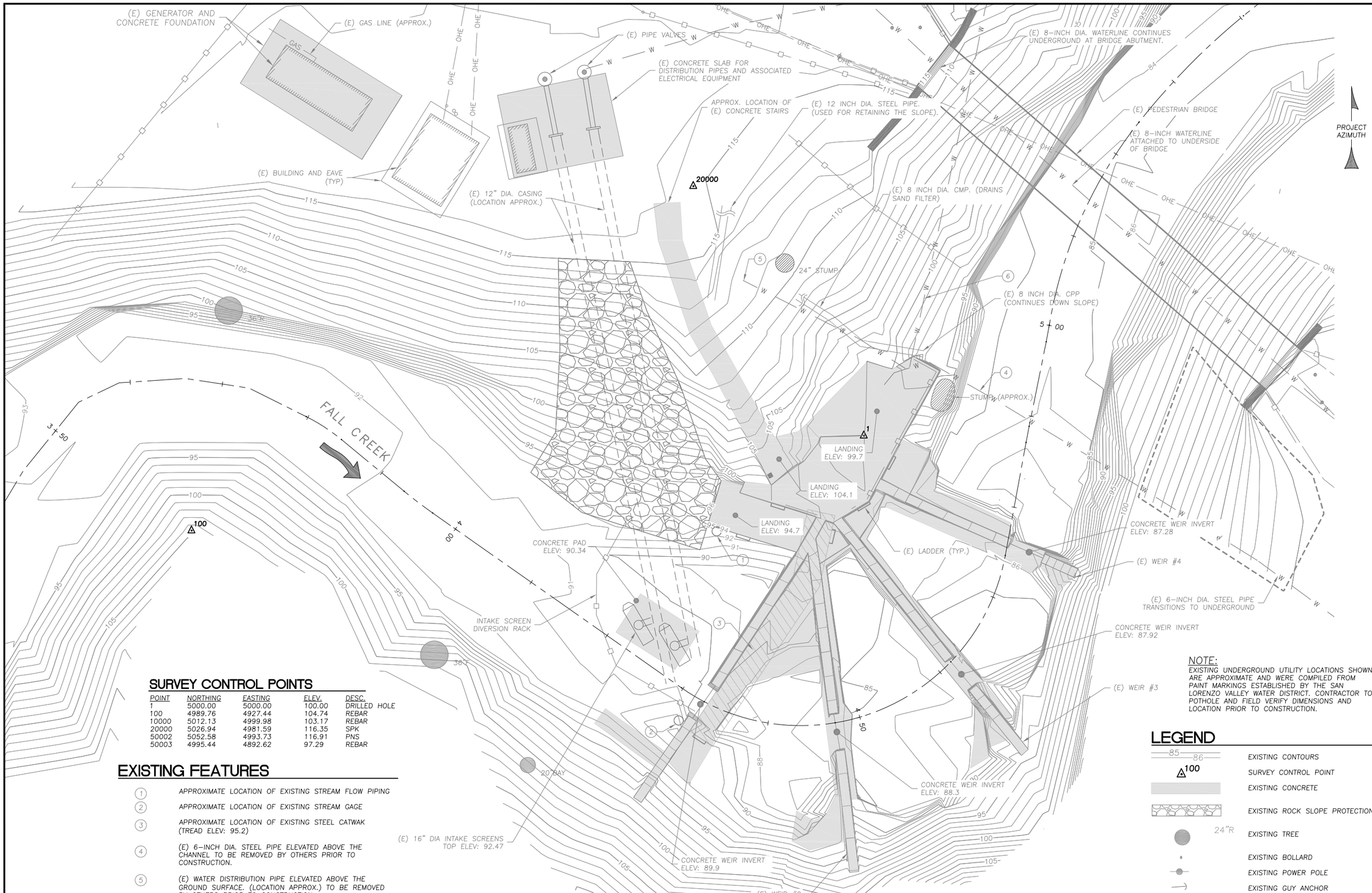

SURVEY CONTROL POINTS

POINT	NORTHING	EASTING	ELEV.	DESC.
1	5000.00	5000.00	100.00	DRILLED HOLE
100	4989.76	4927.44	104.74	REBAR
10000	5012.13	4999.98	103.17	REBAR
20000	5026.94	4981.59	116.35	SPK
50002	5052.58	4993.73	116.91	PNS
50003	4995.44	4892.62	97.29	REBAR

EXISTING FEATURES

1. APPROXIMATE LOCATION OF EXISTING STREAM FLOW PIPING
2. APPROXIMATE LOCATION OF EXISTING STREAM GAGE
3. APPROXIMATE LOCATION OF EXISTING STEEL CATWAK (TREAD ELEV: 95.2)
4. (E) 6-INCH DIA. STEEL PIPE ELEVATED ABOVE THE CHANNEL TO BE REMOVED BY OTHERS PRIOR TO CONSTRUCTION.
5. (E) WATER DISTRIBUTION PIPE ELEVATED ABOVE THE GROUND SURFACE. (LOCATION APPROX.) TO BE REMOVED BY OTHERS PRIOR TO CONSTRUCTION.
6. (E) 4 INCH DIA. STEEL PIPE TO BE REMOVED BY OTHERS PRIOR TO CONSTRUCTION.

EXISTING CONDITION SITE PLAN

SCALE: 1" = 5'

NOTE:
EXISTING UNDERGROUND UTILITY LOCATIONS SHOWN ARE APPROXIMATE AND WERE COMPILED FROM PAINT MARKINGS ESTABLISHED BY THE SAN LORENZO VALLEY WATER DISTRICT. CONTRACTOR TO POTHOLE AND FIELD VERIFY DIMENSIONS AND LOCATION PRIOR TO CONSTRUCTION.

LEGEND

- 85 / 86 — EXISTING CONTOURS
- 100 — SURVEY CONTROL POINT
- EXISTING CONCRETE
- EXISTING ROCK SLOPE PROTECTION
- 24"R — EXISTING TREE
- EXISTING BOLLARD
- EXISTING POWER POLE
- EXISTING GUY ANCHOR
- EXISTING SIGN
- WV — EXISTING WATER VALVE
- OHE — EXISTING OVERHEAD ELECTRIC

WATERWAYS CONSULTING INC.
509A SWIFT ST.
SANTA CRUZ, CA 95060
PH:(831)421-9291 // FAX:(888)819-6847
WWW.WATWAYS.COM

9/9/22
DATE

REGISTERED PROFESSIONAL ENGINEER
MATT W. WELD
No. 62235
Exp. 9-30-23
CIVIL
STATE OF CALIFORNIA

MATT W. WELD

PREPARED AT THE REQUEST OF:

SAN LORENZO VALLEY WATER DISTRICT

EXISTING CONDITIONS SITE PLAN

FALL CREEK FISH LADDER IMPROVEMENT PLAN
100% DESIGN SUBMITTAL

DESIGNED BY:	M.W.
DRAWN BY:	C.H.
CHECKED BY:	M.W.
DATE:	09-09-22
JOB NO.:	13-054

BAR IS ONE INCH ON ORIGINAL DRAWING, ADJUST SCALES FOR REDUCED PLOTS
0 — 1"

C10

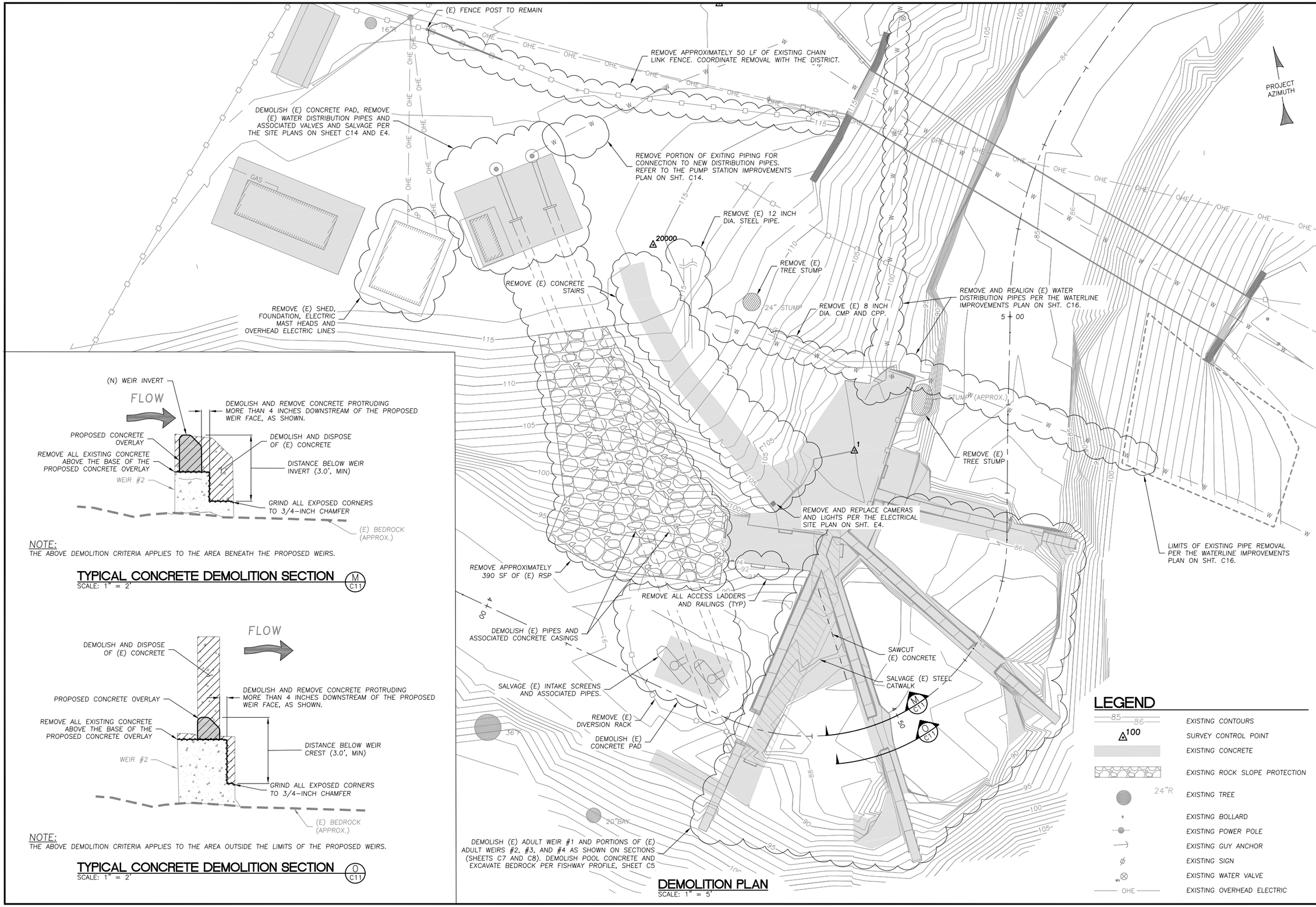

DEMOLITION PLAN
SCALE: 1" = 5'

NOTE:
THE ABOVE DEMOLITION CRITERIA APPLIES TO THE AREA BENEATH THE PROPOSED WEIRS.

TYPICAL CONCRETE DEMOLITION SECTION (M / C11)
SCALE: 1" = 2'

NOTE:
THE ABOVE DEMOLITION CRITERIA APPLIES TO THE AREA OUTSIDE THE LIMITS OF THE PROPOSED WEIRS.

TYPICAL CONCRETE DEMOLITION SECTION (O / C11)
SCALE: 1" = 2'

WATERWAYS CONSULTING INC.
509A SWIFT ST.
SANTA CRUZ, CA 95060
PH:(831)421-9291 // FAX:(888)819-6847
WWW.WATWAYS.COM

DATE 9/9/22

REGISTERED PROFESSIONAL ENGINEER MATT W. WELD No. 62235 Exp. 9-30-23 CIVIL STATE OF CALIFORNIA

MATT W. WELD

PREPARED AT THE REQUEST OF:
SAN LORENZO VALLEY WATER DISTRICT

DEMOLITION PLAN

FALL CREEK FISH LADDER IMPROVEMENT PLAN
100% DESIGN SUBMITTAL

DESIGNED BY:	M.W.
DRAWN BY:	C.H.
CHECKED BY:	M.W.
DATE:	09-09-22
JOB NO.:	13-054

BAR IS ONE INCH ON ORIGINAL DRAWING, ADJUST SCALES FOR REDUCED PLOTS
0 1"

C11

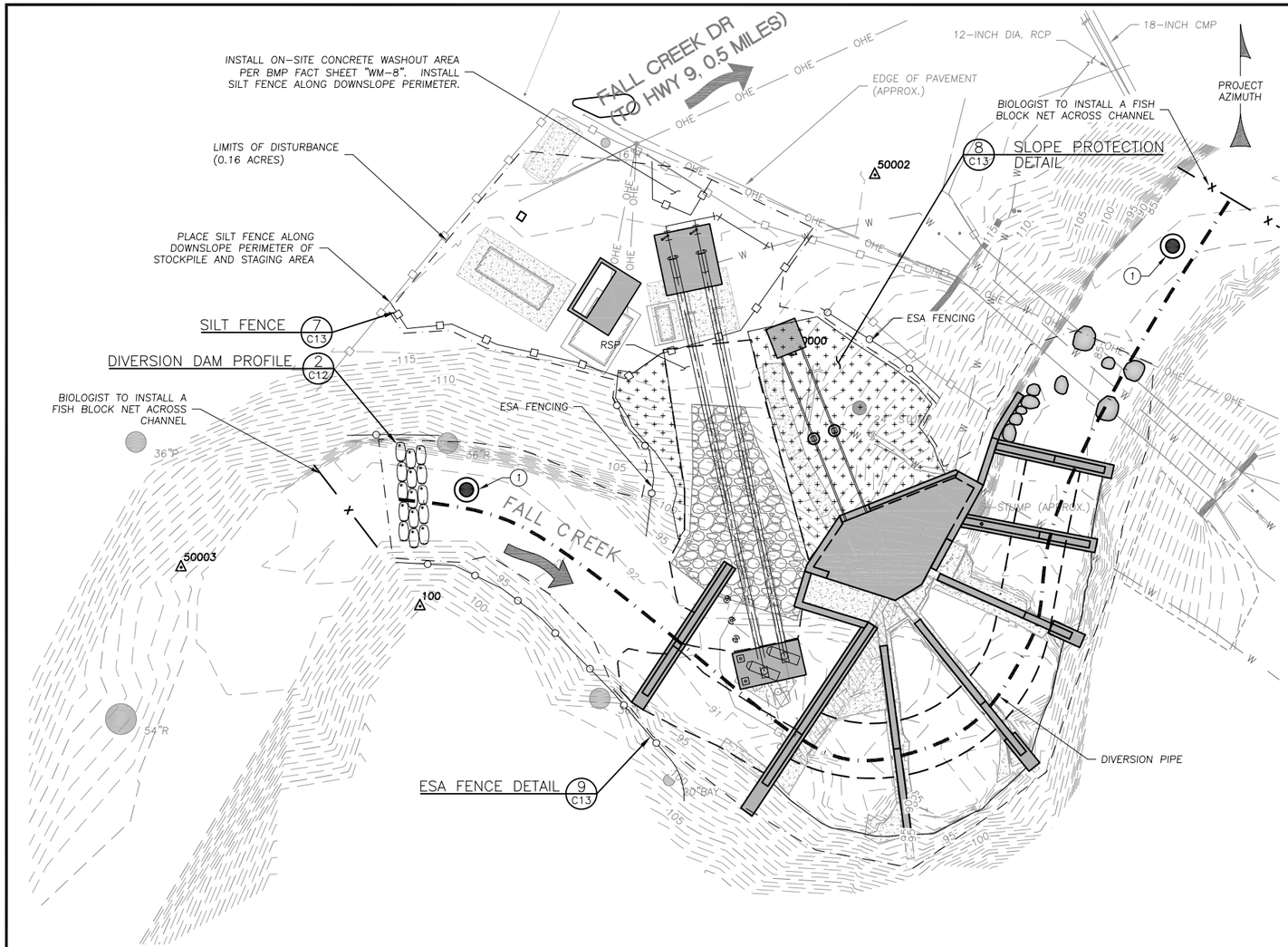

TEMPORARY ACCESS, EROSION CONTROL AND DIVERSION PLAN

SCALE: 1" = 10'

EROSION CONTROL NOTES

1. PRIOR TO COMPLETION OF CONSTRUCTION, ALL DISTURBED AREAS SHALL BE STABILIZED, WINTERIZED, AND VEGETATED WITH THE FOLLOWING SEED MIX:

SEED TYPE	APPLICATION RATE
HORDEUM VULGARE (CEREAL ANNUAL BARLEY)	200 lb/acre
FESTUCA RUBRA (RED FESQUE)	18 lb/acre

FOLLOWING SEED APPLICATION, RAKE SURFACES LIGHTLY, AND COVER WITH STRAW MULCH (WEED-FREE WHEAT OR BARLEY) TO A THICKNESS OF APPROXIMATELY 1.5 INCHES OR APPLY SLOPE PROTECTION FABRIC AND FIBER ROLLS, WHERE SPECIFIED.

2. BETWEEN NOVEMBER 1ST AND APRIL 15, EXPOSED SOIL SHALL BE PROTECTED FROM EROSION AT ALL TIMES. DURING CONSTRUCTION ALL EROSION CONTROL TO COMPLY WITH THE TECHNICAL SPECIFICATIONS AND THE PERMIT CONDITIONS, SUCH PROTECTION MAY CONSIST OF MULCHING AND/OR PLANTING OF NATIVE VEGETATION OF ADEQUATE DENSITY. BEFORE COMPLETION OF THE PROJECT, ANY EXPOSED SOIL ON DISTURBED SLOPES SHALL BE PERMANENTLY PROTECTED FROM EROSION.
3. A STANDBY CREW FOR EMERGENCY WORK SHALL BE AVAILABLE AT ALL TIMES DURING THE RAINY SEASON (NOVEMBER 15 THROUGH APRIL 15). NECESSARY MATERIALS SHALL BE AVAILABLE AND STOCKPILED AT CONVENIENT LOCATIONS TO FACILITATE RAPID CONSTRUCTION OF TEMPORARY DEVICES WHEN RAIN IS IMMINENT.
4. INCORPORATE ADEQUATE DRAINAGE PROCEDURES DURING THE CONSTRUCTION PROCESS TO ELIMINATE EXCESSIVE PONDING AND EROSION.
5. CONSTRUCT AND MAINTAIN EROSION CONTROL MEASURES TO PREVENT THE DISCHARGE OF EARTHEN MATERIALS TO THE CREEK FROM DISTURBED AREAS UNDER CONSTRUCTION AND FROM COMPLETED CONSTRUCTION AREAS.
6. AT ANY TIME OF YEAR, THE PERMITTEE SHALL NOT CONDUCT CONSTRUCTION ACTIVITIES BELOW TOP OF CREEK BANKS OR IN OTHER WATERS OF THE STATE DURING RAIN EVENTS OR ON ANY DAY FOR WHICH THE NATIONAL WEATHER SERVICE HAS PREDICTED A 25% OR MORE CHANCE OF AT LEAST 0.1 INCH RAIN IN 24 HOURS (PREDICTED RAIN EVENT). THE PERMITTEE SHALL INSTALL EFFECTIVE EROSION CONTROL, SEDIMENT CONTROL, AND OTHER PROTECTIVE MEASURES NO LATER THAN THE DAY PRIOR TO THE PREDICTED RAIN EVENT, AND PRIOR TO THE START OF ANY RAINFALL. CONSTRUCTION ACTIVITIES BELOW TOP OF CREEK BANKS OR IN OTHER WATERS OF THE STATE MAY RESUME AFTER THE RAIN HAS CEASED, THE NATIONAL WEATHER SERVICE PREDICTS CLEAR WEATHER FOR AT LEAST 24 HOURS, AND SITE CONDITIONS ARE DRY ENOUGH TO CONTINUE WORK WITHOUT DISCHARGE OF SEDIMENT OR OTHER POLLUTANTS FROM THE PROJECT SITE.
7. MAINTAIN ALL EROSION CONTROL DEVICES AND MODIFY THEM AS SITE PROGRESS DICTATES.
8. MONITOR THE EROSION CONTROL DEVICES DURING STORMS AND MODIFY THEM IN ORDER TO PREVENT PROGRESS OF ANY ONGOING EROSION.
9. CLEAN ANY EROSION OR DEBRIS SPILLING ONTO A PUBLIC STREET.
10. BE FAMILIAR WITH THE CONDITIONS OF APPROVAL OF ALL REQUIRED PROJECT PERMITS AND IMPLEMENT ALL REQUIRED BMP'S PRIOR TO COMMENCING GRADING OPERATIONS.

DIVERSION NOTES

THE DIVERSION PLAN SHOWN IS SCHEMATIC. GENERAL REQUIREMENTS ARE PROVIDED BELOW. THE FULL REQUIREMENTS OF THE DIVERSION AND DEWATERING PLAN ARE SPECIFIED IN THE PROJECT TECHNICAL SPECIFICATIONS.

1. GENERAL
1.1. DEWATER THE PROJECT SITE TO FACILITATE IN-STREAM CONSTRUCTION AND TO REDUCE THE POTENTIAL IMPACTS TO WATER QUALITY DOWNSTREAM OF THE PROJECT SITE.THE PROPOSED DIVERSION STRUCTURE SHALL CONSIST OF A SEALED SAND BAG (GRAVEL FILLED) COFFER DAM AND A GRAVITY FLOW PIPELINE. THE DAM AND METHOD OF SEALING SHALL BE PLACED AT AN APPROPRIATE DEPTH TO CAPTURE SUBSURFACE STREAM FLOW, AS NEEDED TO DEWATER THE STREAMBED.
1.2. NO OTHER DIVERSION METHOD SHALL BE USED WITHOUT AUTHORIZATION OF THE ENGINEER. IF AN ALTERNATE DIVERSION METHOD IS PREFERRED BY THE CONTRACTOR, THE CONTRACTOR SHALL SUBMIT A PLAN TO THE ENGINEER FOR APPROVAL, DETAILING THE DESIRED DIVERSION METHOD.
1.3. CONFIRM THAT A FAVORABLE LONG TERM WEATHER FORECAST (1 WEEK, MIN.) IS OBSERVED PRIOR TO PLACEMENT OF DIVERSION STRUCTURES.
1.4. PRIOR TO PLACEMENT OF DIVERSION STRUCTURE, REMOVE FISH FROM THE PROJECT REACH, IN ACCORDANCE WITH SECTION 2.
1.5. DIVERT FLOW ONLY WHEN THE DIVERSION CONSTRUCTION IS COMPLETE. FOLLOWING ENGINEER'S APPROVAL OF THE COMPLETED WORK, REMOVE DIVERSION BEGINNING AT THE DOWNSTREAM LIMIT, IN AN UPSTREAM DIRECTION.

2. FISH REMOVAL (NIC)
2.1. FISH SHALL BE REMOVED FROM AND REINTRODUCED TO THE PROJECT SITE BY A QUALIFIED FISHERIES BIOLOGIST, AUTHORIZED BY THE NATIONAL MARINE FISHERIES SERVICE AND THE CALIFORNIA DEPARTMENT OF FISH AND WILDLIFE. REFER TO THE TECHNICAL SPECIFICATIONS AND PERMIT CONDITIONS FOR DETAILED DISCUSSION OF BIOLOGIST'S ROLE AND RESPONSIBILITIES.
2.2. BLOCK NETS SHALL BE PROVIDED AND INSTALLED BY THE FISHERIES BIOLOGIST. BLOCK NETS SHALL BE MAINTAINED BY THE CONTRACTOR BOTH UPSTREAM AND DOWNSTREAM OF THE DIVERSION, THROUGHOUT THE PERIOD OF CONSTRUCTION. MAINTENANCE INCLUDES PERIODIC REMOVAL OF ACCUMULATED DEBRIS, AS NECESSARY TO ENSURE FUNCTION. BLOCK NETS SHALL BE REMOVED BY THE FISHERIES BIOLOGIST AFTER THE DIVERSION IS REMOVED AND THE IN CHANNEL WORK AREA IS RE-WATERED.

3. DIVERSION SYSTEM
3.1. THE CONTRACTOR SHALL INSTALL A TEMPORARY SEALED SANDBAG DAM TO CAPTURE AND DIVERT STREAM FLOW UPSTREAM OF THE PROJECT SITE. ONLY CLEAN RIVER-RUN GRAVELS MAY BE USED TO FILL SANDBAGS. THE DIVERSION STRUCTURE SHALL BE CONSTRUCTED AS SHOWN ON DETAIL 2, THIS SHEET, OR AS DIRECTED BY THE ENGINEER IN THE FIELD.
3.2. IN THE EVENT OF A SIGNIFICANT STORM, THE CONTRACTOR SHALL BE PREPARED TO TAKE NECESSARY MEASURES TO INSURE SAFE PASSAGE OF STORM WATER FLOW THROUGH THE PROJECT AREA, WITHOUT DAMAGE TO EXISTING STRUCTURES, OR INTRODUCTION OF EXCESSIVE SEDIMENT. THE CONTRACTOR SHALL BE RESPONSIBLE FOR ALL TEMPORARY EROSION CONTROL B.M.P.S.

4. DEWATERING OF CONSTRUCTION AREAS
4.1. ANY DEWATERING ACTIVITIES WHICH MAY BE REQUIRED FOR CONSTRUCTION PURPOSES SHALL BE CONDUCTED IN A MANNER WHICH DOES NOT VIOLATE ANY WATER QUALITY STANDARDS ESTABLISHED BY THE CALIFORNIA REGIONAL WATER QUALITY CONTROL BOARD.
4.2. DISCHARGE OF WATER FROM THE DEWATERED CONSTRUCTION SITE, EITHER BY GRAVITY OR PUMPING, SHALL BE PERFORMED IN A MANNER TO PREVENT EXCESSIVE TURBIDITY FROM ENTERING THE RECEIVING WATERWAYS AND TO PREVENT SCOUR AND EROSION OUTSIDE OF THE CONSTRUCTION SITE. PUMPED WATER SHOULD BE PRE-FILTERED WITH SAND/GRAVEL PACK AROUND SUMPS FOR SUBSURFACE FLOWS AND A SILT FENCE OR HAY BALES AROUND PUMPS FOR SURFACE FLOW. PUMPED WATER SHALL BE DISCHARGED INTO ISOLATED LOCAL DEPRESSIONS, FILTER BAGS, SETTLING (BAKER) TANKS, OR TEMPORARY SEDIMENT BASINS, AS NECESSARY TO MEET WATER QUALITY REQUIREMENTS. WHERE WATER TO BE DISCHARGED INTO THE CREEK WILL CREATE EXCESSIVE TURBIDITY, THE WATER SHALL BE ROUTED THROUGH A SEDIMENT INTERCEPTOR OR OTHER FACILITIES TO REMOVE SEDIMENT FROM WATER.
4.3. CONTRACTOR SHALL SUPPLY ALL NECESSARY PUMPS, PIPING, FILTERS, SHORING, AND OTHER TOOLS AND MATERIALS NECESSARY FOR DEWATERING.

ACCESS AND STAGING AREA NOTES

1. PRIOR TO STARTING WORK THE CONTRACTOR SHALL SUBMIT FOR ACCEPTANCE BY THE ENGINEER A HAZARDOUS MATERIALS CONTROLS AND SPILL PREVENTION PLAN. THE PLAN SHALL INCLUDE PROVISIONS FOR PREVENTING HAZARDOUS MATERIALS FROM CONTAMINATING SOIL OR ENTERING WATER COURSES, AND SHALL ESTABLISH A SPILL PREVENTION AND COUNTERMEASURE PLAN.
2. UTILIZE ONLY THE APPROVED ACCESS POINTS, AS SHOWN ON THE DRAWINGS.
3. THE DOWNSLOPE PERIMETER OF STAGING OR STOCKPILE AREAS SHALL BE CONTAINED WITH SILT FENCE.
4. ALL EQUIPMENT AND MATERIALS SHALL BE STORED, MAINTAINED AND REFUELED IN A DESIGNATED PORTION OF THE STAGING AREA.

KEY NOTE

(1) ONE OR MORE SCREENED WELL-POINTS WILL BE REQUIRED FOR PUMPING OF SEEPAGE AND CONTAMINATED DISCHARGE.

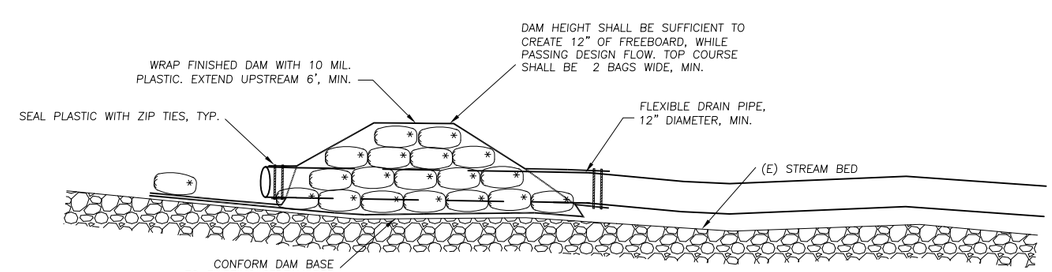

DIVERSION DAM PROFILE 2 C12

SCALE: 1" = 5'

NOTE: CONTRACTOR MAY USE ALTERNATE DAM DETAIL, SUBJECT TO APPROVAL OF THE ENGINEER AND THE PERMITTING AGENCIES.

WATERWAYS CONSULTING INC.
509A SWIFT ST.
SANTA CRUZ, CA 95060
PH:(831)421-9291 // FAX:(888)819-6847
WWW.WATWAYS.COM

9/9/22 DATE

REGISTERED PROFESSIONAL ENGINEER MATTHEW W. WELD No. 62235 Exp. 9-30-23 CIVIL STATE OF CALIFORNIA

MATT W. WELD

PREPARED AT THE REQUEST OF:
SAN LORENZO VALLEY WATER DISTRICT

TEMPORARY ACCESS, EROSION CONTROL AND DIVERSION PLAN

FALL CREEK FISH LADDER IMPROVEMENT PLAN
100% DESIGN SUBMITTAL

DESIGNED BY:	G.K.G.
DRAWN BY:	G.K.G.
CHECKED BY:	M.W.W.
DATE:	09-09-22
JOB NO.:	13-054

BAR IS ONE INCH ON ORIGINAL DRAWING, ADJUST SCALES FOR REDUCED PLOTS
0 1"

NOTE:
COMPLY WITH "STEEL PIPE RAILINGS" NOTES, SHEET S0.

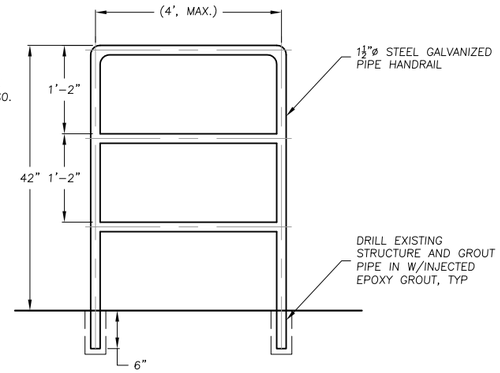

GUARD RAIL DETAIL (5 / C4)
SCALE: 1"=1'

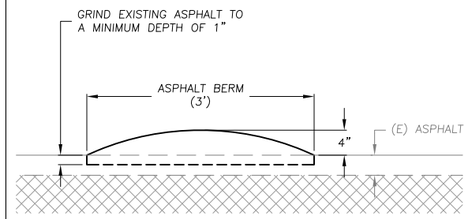

NOTE:
IF ASPHALT FAILS, SAWCUT AND REPAVE

ASHALT BERM (6 / C2)
SCALE: N.T.S.

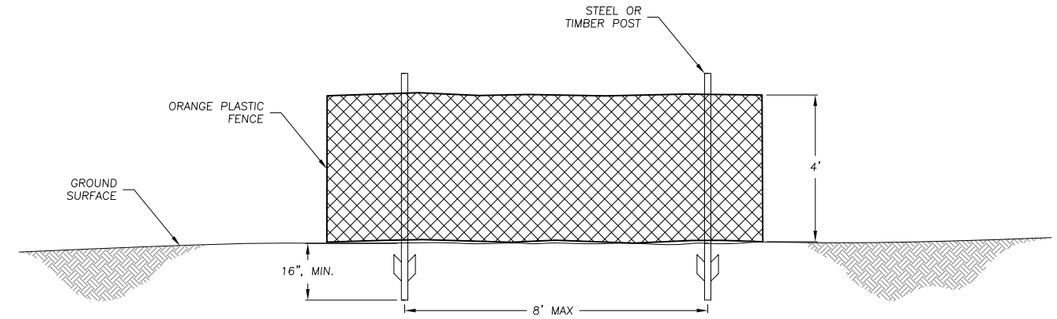

ESA FENCE DETAIL (9 / C12)
SCALE: 1" = 2'

NOTES:
1. IF THE LADDER IS INSTALLED ON THE FACE OF PROPOSED WALL, D = 1'-6"
   IF THE LADDER IS INSTALLED ON THE FACE OF AN EXISTING STRUCTURE, D = 1'-0"
2. LADDERS ARE TO BE HOT DIPPED GALVANIZED AFTER FABRICATION.
3. SAFETY RAILS REQUIRED IF LADDER IS OVER 5' HIGH.
4. ALL LADDER COMPONENTS SHALL BE IN COMPLIANCE WITH OSHA REGULATIONS FOR FIXED INDUSTRIAL LADDERS, SECTION 1910.23
5. COMPLY WITH MATERIALS SPECIFICATIONS OUTLINED IN "PIPE RAILINGS" NOTES, SHEET S0.

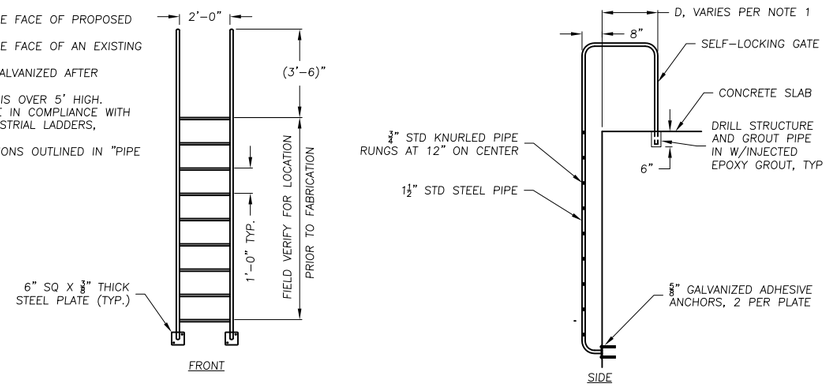

ACCESS LADDER DETAIL (4 / C4)
SCALE: 1"=3'

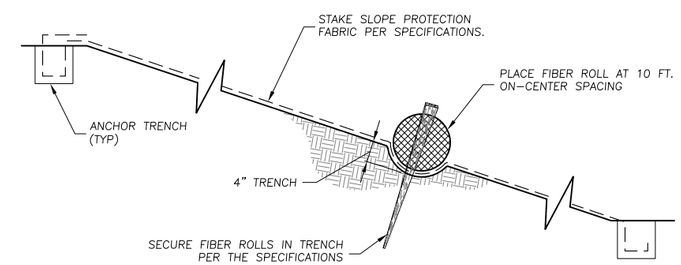

SLOPE PROTECTION FABRIC (8 / C12)
SCALE: 1"=1'

DETAIL NOT USED (3 / –)

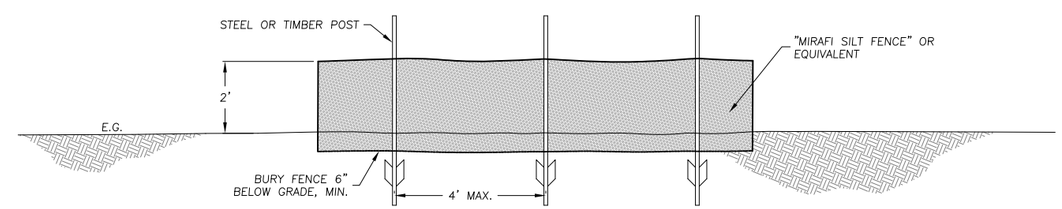

SILT FENCE NOTES
1. DIG TRENCH FIRST, THEN ERECT FENCE IN TRENCH. BACKFILL AND COMPACT SOIL TO SECURE FABRIC.
2. PROVIDE 1' MINIMUM OVERLAP AT FENCE SPLICES.
3. SILT FENCE SHALL BE PLACED ON SLOPE CONTOURS.
4. INSPECT AND REPAIR FENCE AFTER EACH STORM EVENT AND REMOVE ACCUMULATED SEDIMENT, TO AN APPROVED AREA.
5. ALL FENCE TERMINATIONS SHOULD BE TURNED UPSLOPE TO PREVENT FLANKING.

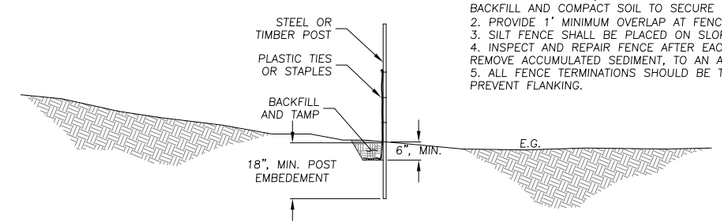

SILT FENCE (7 / C12)
SCALE: 1" = 2'

WATERWAYS CONSULTING INC.
509A SWIFT ST.
SANTA CRUZ, CA 95060
PH:(831)421-9291 // FAX:(888)819-6847
WWW.WATWAYS.COM

DATE 9/9/22

REGISTERED PROFESSIONAL ENGINEER MATT W. WELD No. 62235 Exp. 9-30-23 CIVIL STATE OF CALIFORNIA

MATT W. WELD

PREPARED AT THE REQUEST OF:
SAN LORENZO VALLEY WATER DISTRICT

DETAILS

FALL CREEK FISH LADDER IMPROVEMENT PLAN
100% DESIGN SUBMITTAL

DESIGNED BY:	G.K.G.
DRAWN BY:	G.K.G.
CHECKED BY:	M.W.W.
DATE:	09-09-22
JOB NO.:	13-054

BAR IS ONE INCH ON ORIGINAL DRAWING, ADJUST SCALES FOR REDUCED PLOTS
0 1"

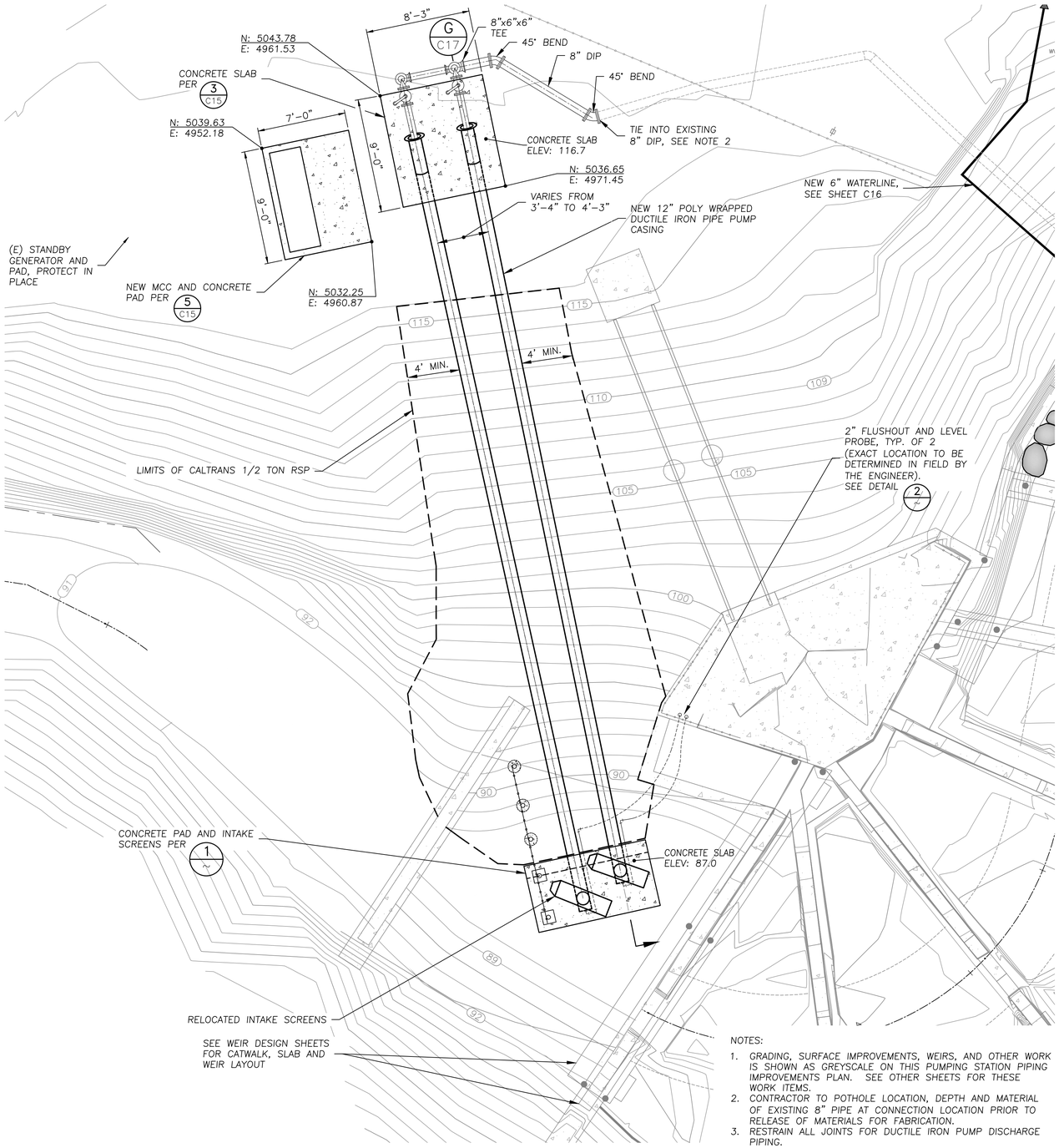

SITE PLAN
SCALE: 1" = 5'

NOTES:

1. GRADING, SURFACE IMPROVEMENTS, WEIRS, AND OTHER WORK IS SHOWN AS GREYSCALE ON THIS PUMPING STATION PIPING IMPROVEMENTS PLAN. SEE OTHER SHEETS FOR THESE WORK ITEMS.
2. CONTRACTOR TO POTHOLE LOCATION, DEPTH AND MATERIAL OF EXISTING 8" PIPE AT CONNECTION LOCATION PRIOR TO RELEASE OF MATERIALS FOR FABRICATION.
3. RESTRAIN ALL JOINTS FOR DUCTILE IRON PUMP DISCHARGE PIPING.

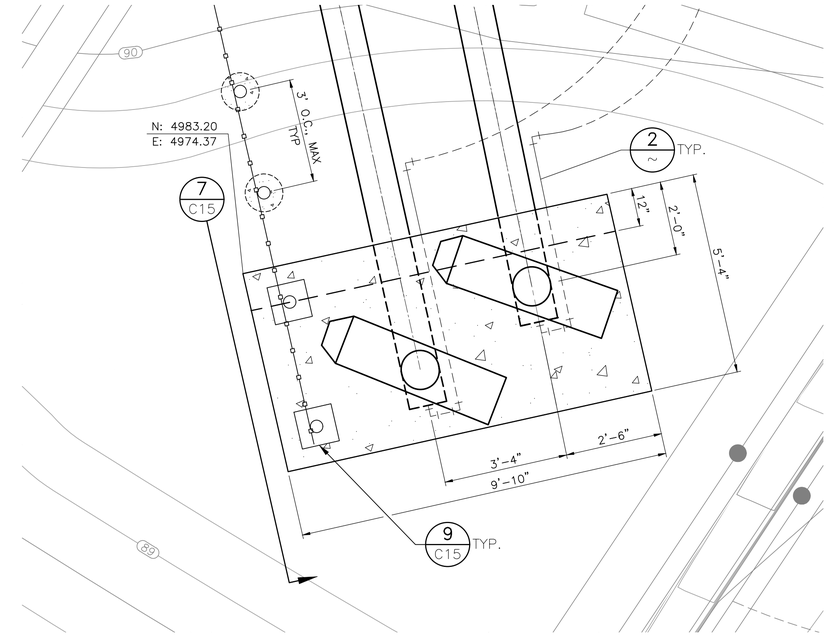

INTAKE SCREENS DETAIL 1
SCALE: 1"=2'

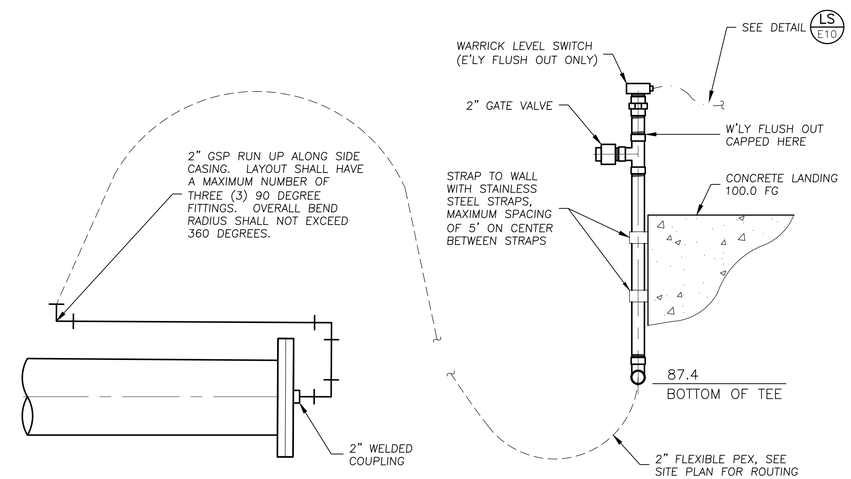

SCHEMATIC DETAIL (TYP. OF 2) 2
N.T.S.

REVISIONS			
REF.	DATE	BY	DESCRIPTION

RGN 9/9/22
DESIGNED BY DATE

PMD 9/9/22
DRAWN BY DATE

JHR 9/9/22
CHECK BY DATE

REGISTERED PROFESSIONAL ENGINEER ROBERT G. NAYOR NO. 78271 Exp. 9/30/23 CIVIL STATE OF CALIFORNIA
9/9/22

WSC
805 AEROVISTA PLACE, SUITE 201 SAN LUIS OBISPO, CA 93401
PHONE: (805)457-8833 FAX: (805)888-2764

SAN LORENZO VALLEY WATER DISTRICT
BOULDER CREEK, CALIFORNIA

FALL CREEK FISH LADDER IMPROVEMENT PLAN

PUMP STATION IMPROVEMENTS PLAN

BAR IS ONE INCH ON ORIGINAL DRAWING, ADJUST SCALES FOR REDUCED PLOTS
0 1"

C14

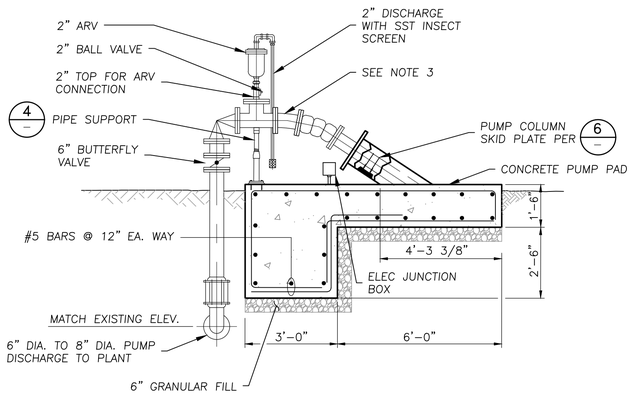

NOTES:

1. FOR CLARITY, ENTIRE PUMP COLUMN NOT SHOWN. PIPE COLUMN EXTENDS BEYOND PAD.
2. SMALL DIAMETER ARV PIPING TO BE GALVANIZED STEEL. PROVIDE DIELECTRIC ISOLATION AT ALL MATERIAL CHANGES.
3. INSTALL SALVAGED PIPING AND COMPONENTS, SEE SHEET C8 FOR DETAILS.

DISCHARGE SECTION DETAIL (3 / C8)

SCALE: 3/8"=1'-0"

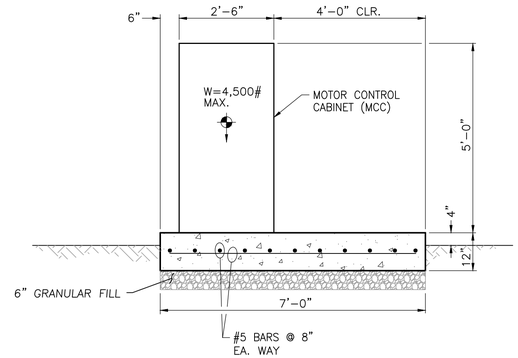

SECTION

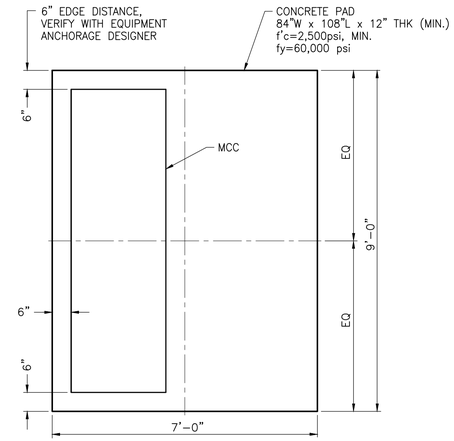

PLAN

NOTES:

1. MCC ANCHORAGE WITH SUPPORTING STAMPED AND SIGNED CALCULATIONS SHALL BE PROVIDED BY MCC MANUFACTURER.
2. PROVIDE 3" MIN. CONCRETE COVER (TYP).

MCC PAD DETAIL (5 / C14)

SCALE: 1/2"=1'-0"

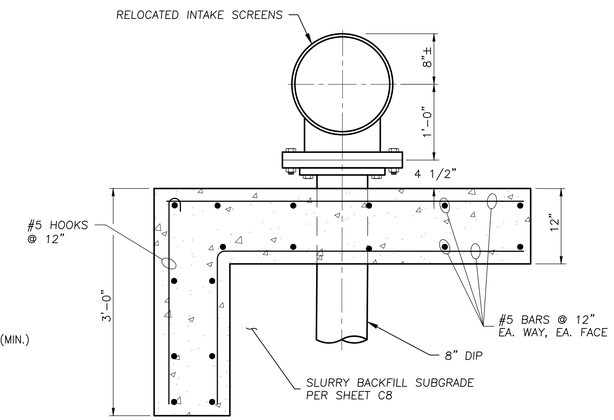

NOTE:

1. PROVIDE NEW STAINLESS STEEL HARDWARE FOR CREEK INTAKE SCREEN FLANGED CONNECTION.

CREEK INTAKE SCREEN DETAIL (7 / C14)

SCALE: 1"=1'-0"

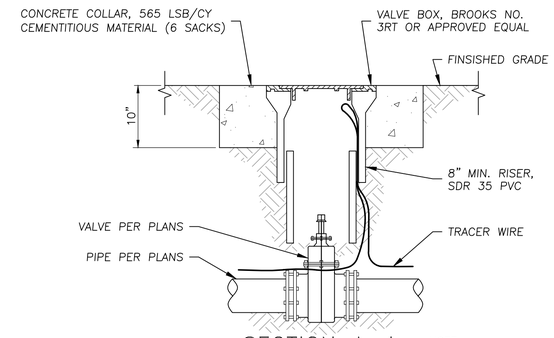

SECTION A–A

NOTE:

1. ALL JOINTS SHALL BE RESTRAINED

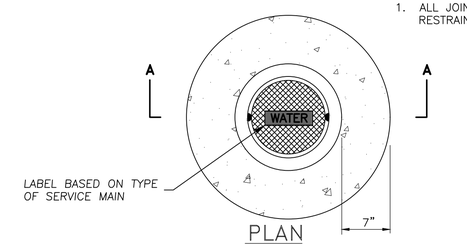

PLAN

TYPICAL VALVE BOX DETAIL (8 / C16)

SCALE: NTS

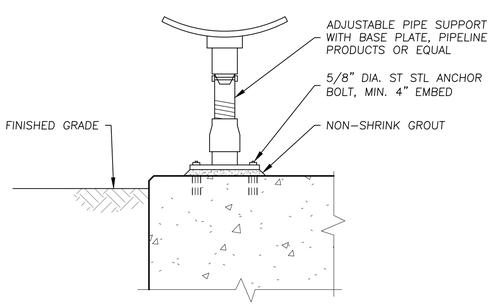

NOTE:

1. ANCHOR BOLTS SHALL BE ASTM F1554 GRADE 36 WITH HEAVY HEX NUTS PER ASTM A563 GRADA A AND WASHERS PER ASTM F436 TYPE 1. INSTALL IN ACCORDANCE WITH MANUFACTURER'S RECOMMENDATIONS.
2. MAINTAIN 6" MINIMUM EDGE DISTANCE FOR ANCHORS.

PIPE SUPPORT DETAIL (4 / –)

SCALE: 3/8"=1'-0"

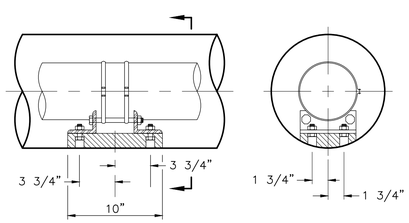

NOTE:

1. INSTALL PUMP COLUMN SKID ASSEMBLY AT 8' INTERVALS INSIDE THE PUMP CASING.

PUMP COLUMN SKID DETAIL (6 / –)

SCALE: 1/2"=1'-0"

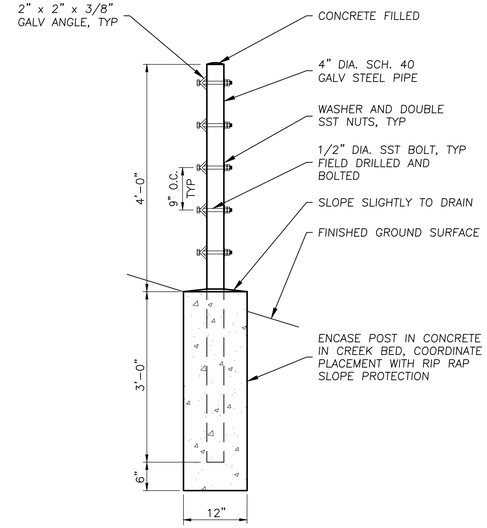

CREEK BED INSTALLATION

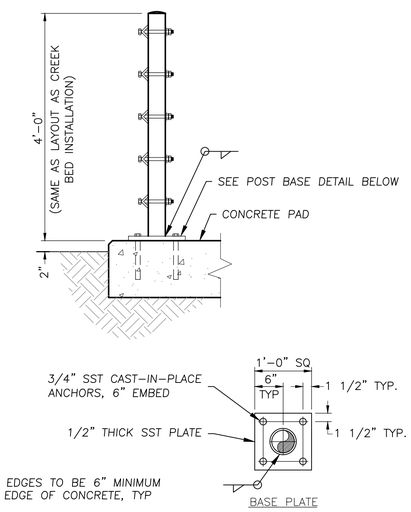

NOTE:
PLATE EDGES TO BE 6" MINIMUM FROM EDGE OF CONCRETE, TYP

CONCRETE PAD INSTALLATION

INTAKE SCREEN DIVERSION RACK (9 / C14)

SCALE: 3/4"=1'-0"

REVISIONS			
REF.	DATE	BY	DESCRIPTION

RGN 9/9/22
DESIGNED BY DATE

PMD 9/9/22
DRAWN BY DATE

JHR 9/9/22
CHECK BY DATE

REGISTERED PROFESSIONAL ENGINEER ROBERT G. NATOLI NO. 78271 Exp. 9/30/23 CIVIL STATE OF CALIFORNIA
9/9/22

WSC
805 AEROVISTA PLACE, SUITE 201 SAN LUIS OBISPO, CA 93401
PHONE: (805)457-8833 FAX: (805)888-2764

SAN LORENZO VALLEY WATER DISTRICT
BOULDER CREEK, CALIFORNIA

FALL CREEK FISH LADDER IMPROVEMENT PLAN

PUMP STATION DETAILS

BAR IS ONE INCH ON ORIGINAL DRAWING, ADJUST SCALES FOR REDUCED PLOTS
0 1"

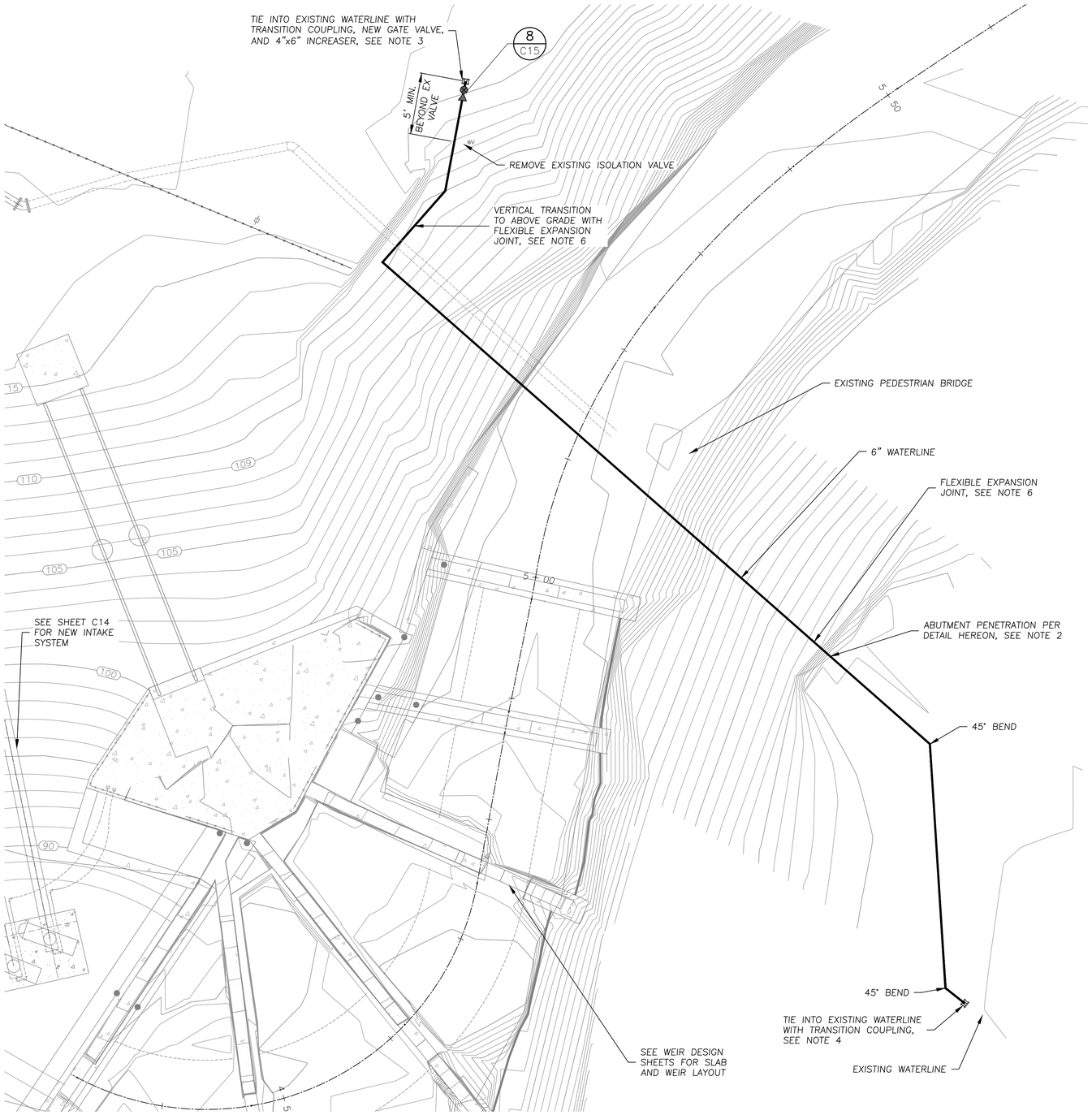

SITE PLAN

SCALE: 1" = 5'

NOTES:

1. SUPPORT 6" WATERLINE BELOW BRIDGE USING EXISTING CHANNEL CROSS SUPPORTS. MOUNT TO EXISTING CHANNELS WITH 1/2" DIAMETER STEEL U-BOLTS. PROVIDE 1/8" THICK HDPE PAD AT CONTACT POINT WITH CHANNEL MEMBERS. DRILL HOLES IN CHANNELS FOR U-BOLT CONNECTION. PROVIDE NUTS ABOVE AND BELOW CHANNEL FOR SECURE U-BOLT MOUNTING WITHOUT TIGHTENING U-BOLT ON PIPING. SECURE PAD WITH U-BOLTS.
2. ABUTMENT PENETRATION ELEVATION TO MATCH EXISTING 8" PIPE PENETRATION THROUGH ABUTMENT. SPACE 18" CLEAR FROM EXISTING ABUTMENT PENETRATION.
3. CONNECT TO EXISTING 4" WATER MAIN. POTHOLE TO FIELD VERIFY PIPE LOCATION, DEPTH, DIAMETER, AND MATERIAL PRIOR TO PIPE CONNECTION FITTING SUBMITTAL. PROVIDE ROMAC 501 TRANSITION COUPLING, OR APPROVED EQUAL. INSTALL 4" DUCTILE IRON, EPOXY COATED, AWWA C509 BURIED GATE VALVE WITH VALVE BOX AND 4" x 6" INCREASER ADJACENT TO TRANSITION COUPLING.
4. POTHOLE TO VERIFY PIPE LOCATION, DEPTH, DIAMETER, AND MATERIAL PRIOR TO PIPE CONNECTION FITTING SUBMITTAL. PROVIDE ROMAC 501 TRANSITION COUPLING, OR APPROVED EQUAL.
5. PROVIDE 3' MINIMUM COVER FOR WATERLINE BURIED SECTIONS, TYPICAL. WATERLINE TO BE CLASS 350 DUCTILE IRON PIPE. TRENCH BACKFILL TO BE NATIVE MATERIAL OUTSIDE BEDDING ZONE. PROVIDE SLOPE PROTECTION PER GRADING SHEETS. PROVIDE AWWA C110, CLASS 350 DUCTILE IRON FITTINGS WITH 2200 MEGALUG OR EQUAL RESTRAINT JOINTS. INCLUDE FITTING AND RESTRAINT JOINT COATINGS FOR CORROSIVE ENVIRONMENTS. PIPE SYSTEM TO BE FULLY RESTRAINED. PIPE BEDDING ZONE TO BE SAND CEMENT SLURRY BACKFILL AND SPAN THE TRENCH WIDTH FROM 6" BELOW TO 12" ABOVE THE 6" WATERLINE. ALL PIPELINE COMPONENTS TO BE NSF 61 CERTIFIED.
6. PROVIDE FLEX-TEND FORCE BALANCED FLEXIBLE EXPANSION JOINT BY EBAA IRON, INC, OR APPROVED EQUAL, WITHIN 3' OF TRANSITION FROM BURIED TO EXPOSED PIPING.

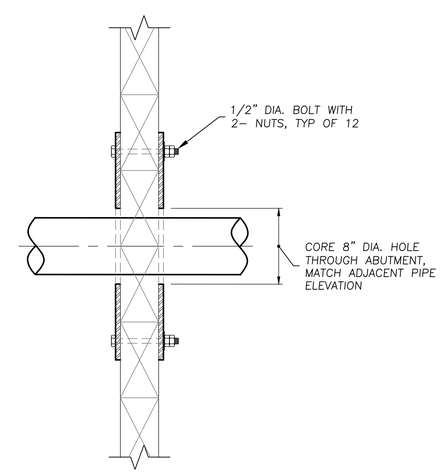

SECTION A-A

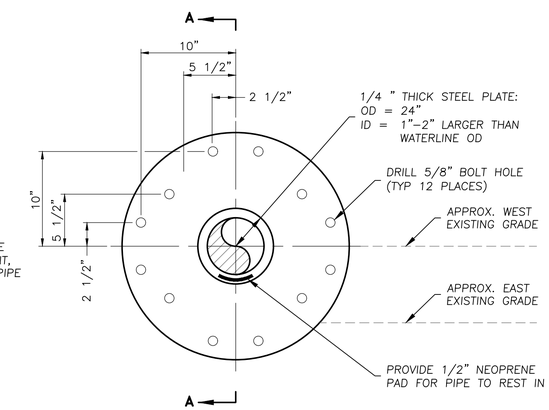

NOTE:
BOLT HOLE LOCATIONS SYMMETRICAL ABOUT HORIZONTAL AND VERTICAL CENTERLINES

ABUTMENT PENETRATION DETAIL

SCALE: 1 1/2"=1'-0"

REVISIONS			
REF.	DATE	BY	DESCRIPTION

RGN 9/9/22
DESIGNED BY DATE

PMD 9/9/22
DRAWN BY DATE

JHR 9/9/22
CHECK BY DATE

REGISTERED PROFESSIONAL ENGINEER ROBERT G. NATOLI NO. 78271 Exp. 9/30/23 CIVIL STATE OF CALIFORNIA
9/9/22

WSC
805 AEROVISTA PLACE, SUITE 201 SAN LUIS OBISPO, CA 93401
PHONE: (805)457-8833 FAX: (805)888-2764

SAN LORENZO VALLEY WATER DISTRICT
BOULDER CREEK, CALIFORNIA

FALL CREEK FISH LADDER IMPROVEMENT PLAN

WATERLINE IMPROVEMENTS PLAN

BAR IS ONE INCH ON ORIGINAL DRAWING, ADJUST SCALES FOR REDUCED PLOTS
0 1"

C16

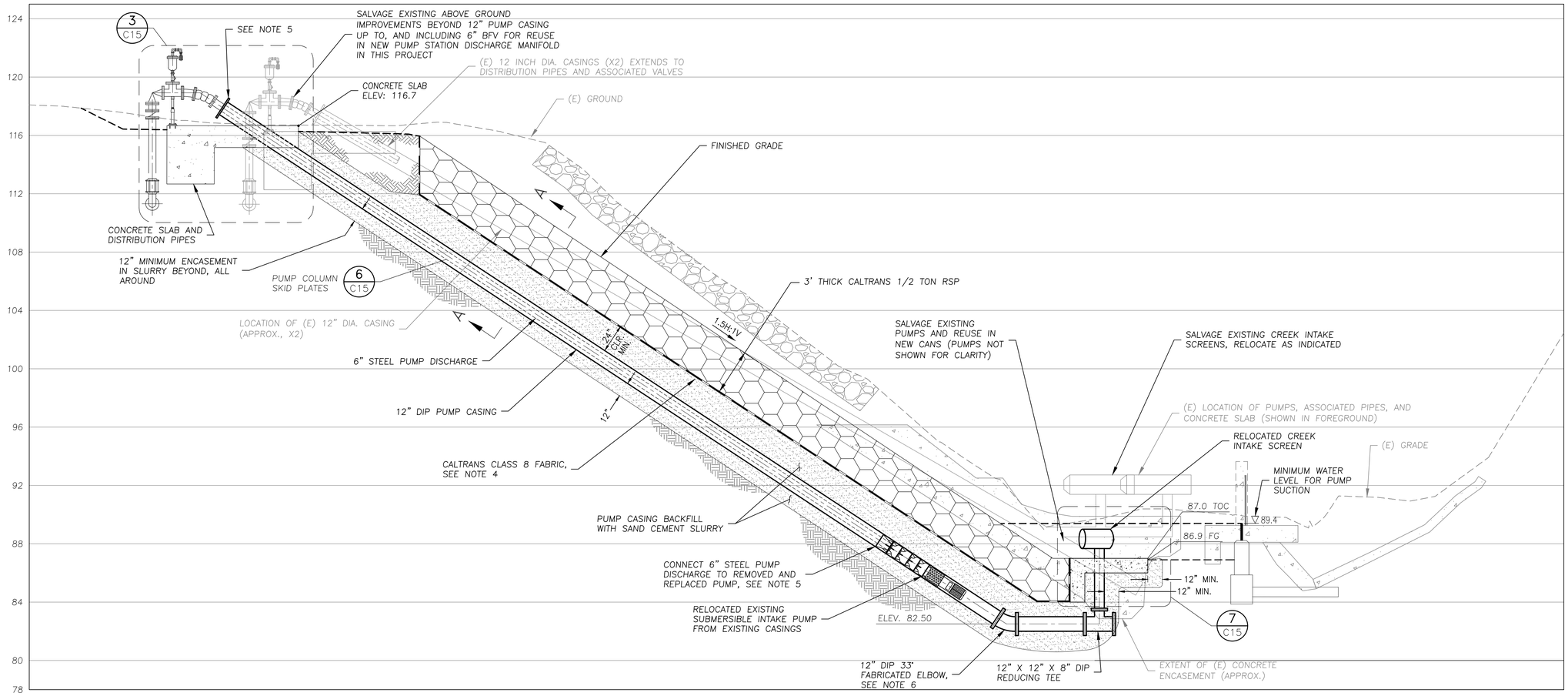

SECTION AT PIPE INTAKE

G
C14

SCALE: 1" = 4'

NOTES:

1. EXISTING INTAKE SCREENS, AND PIPING ARE SHOWN FOR REFERENCE ON THIS SHEET. SEE DEMOLITION DRAWINGS FOR DIRECTION ON THE REMOVAL OF THE EXISTING SYSTEM.
2. SUBMERSIBLE INTAKE PUMP SUCTION TO BE A MINIMUM OF 2 PUMP CASING DIAMETERS DOWNSTREAM OF THE 33° FABRICATED FITTING.
3. 1-SACK SLURRY BACKFILL TO EXTEND BETWEEN THE TWO 12" DIP PUMP CASINGS AND EXTEND 2' LATERALLY BEYOND THE OUTSIDE EDGE OF EACH PUMP CASING. SEE SECTION A-A THIS SHEET.
4. CALTRANS CLASS 8 FABRIC TO EXTEND 18" BEYOND 1/2 TON RSP ON ALL SIDES, MINIMUM.
5. COORDINATE PUMP CASING LENGTH, STEEL PUMP DISCHARGE, AND END CONNECTIONS WITH EXISTING PIPING THAT IS BEING SALVAGED AND REUSED.
6. 33° BEND MAY BE ACHIEVED WITH 22.5° AND 11.25° STANDARD FITTINGS OR FABRICATED 33.3° FITTING.

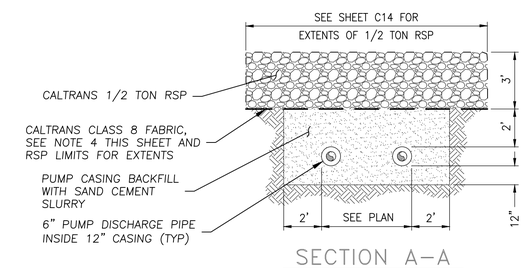

SECTION A-A

REVISIONS			
REF.	DATE	BY	DESCRIPTION

RGN 9/9/22
DESIGNED BY DATE

PMD 9/9/22
DRAWN BY DATE

JHR 9/9/22
CHECK BY DATE

REGISTERED PROFESSIONAL ENGINEER ROBERT C. NAGEL NO. 78271 Exp. 9/30/23 CIVIL STATE OF CALIFORNIA
9/9/22

WSC
805 AEROVISTA PLACE, SUITE 201 SAN LUIS OBISPO, CA 93401
PHONE: (805)457-8833 FAX: (805)888-2764

SAN LORENZO VALLEY WATER DISTRICT
BOULDER CREEK, CALIFORNIA

FALL CREEK FISH LADDER IMPROVEMENT PLAN

PUMP STATION SECTION

BAR IS ONE INCH ON ORIGINAL DRAWING, ADJUST SCALES FOR REDUCED PLOTS
0 1"

C17

GENERAL NOTES

1. PREPARED AT THE REQUEST OF:
   SAN LORENZO VALLEY WATER DISTRICT
   13060 HIGHWAY 9
   BOULDER CREEK, CALIFORNIA 95006

2. ALL CONSTRUCTION AND MATERIALS SHALL CONFORM TO THE DRAWINGS, SPECIFICATIONS, AND THE 2018 EDITION OF THE STATE OF CALIFORNIA STANDARD SPECIFICATIONS, ISSUED BY THE DEPARTMENT OF TRANSPORTATION (HEREAFTER REFERRED TO AS "STANDARD SPECIFICATIONS").

3. THE ENGINEER SHALL BE NOTIFIED AT LEAST 72 HOURS PRIOR TO CONSTRUCTION. THE ENGINEER OR A DESIGNATED REPRESENTATIVE SHALL OBSERVE THE CONSTRUCTION PROCESS, AS NECESSARY TO ENSURE PROPER INSTALLATION PROCEDURES.

4. EXISTING UNDERGROUND UTILITY LOCATIONS:

   A. CALL UNDERGROUND SERVICE ALERT (1-800-642-2444) TO LOCATE ALL UNDERGROUND UTILITY LINES AT LEAST 2 BUSINESS DAYS PRIOR TO COMMENCING CONSTRUCTION.

   B. PRIOR TO BEGINNING WORK, CONTACT ALL UTILITIES COMPANIES WITH REGARD TO WORKING OVER, UNDER, OR AROUND EXISTING FACILITIES AND TO OBTAIN INFORMATION REGARDING RESTRICTIONS THAT ARE REQUIRED TO PREVENT DAMAGE TO THE FACILITIES.

   C. EXISTING UTILITY LOCATIONS SHOWN ARE COMPILED FROM INFORMATION SUPPLIED BY THE APPROPRIATE UTILITY AGENCIES AND FROM FIELD MEASUREMENTS TO ABOVE GROUND FEATURES READILY VISIBLE AT THE TIME OF SURVEY. LOCATIONS SHOWN ARE APPROXIMATE. THE CONTRACTOR IS CAUTIONED THAT ONLY ACTUAL EXCAVATION WILL REVEAL THE DIMENSIONS, SIZES, MATERIALS, LOCATIONS, AND DEPTH OF UNDERGROUND UTILITIES.

   D. THE CONTRACTOR IS SOLELY RESPONSIBLE FOR THE LOCATION AND/OR PROTECTION OF ALL EXISTING AND PROPOSED PIPING, UTILITIES, TRAFFIC SIGNAL EQUIPMENT (BOTH ABOVE GROUND AND BELOW GROUND), STRUCTURES, AND ALL OTHER EXISTING IMPROVEMENTS THROUGHOUT CONSTRUCTION.

   E. PRIOR TO COMMENCING FABRICATION OR CONSTRUCTION, DISCOVER OR VERIFY THE ACTUAL DIMENSIONS, SIZES, MATERIALS, LOCATIONS, AND ELEVATIONS OF ALL EXISTING UTILITIES AND POTHOLE THOSE AREAS WHERE POTENTIAL CONFLICTS ARE LIKELY OR DATA IS OTHERWISE INCOMPLETE.

   F. TAKE APPROPRIATE MEASURES TO PROTECT EXISTING UTILITIES DURING CONSTRUCTION OPERATIONS. CONTRACTOR IS SOLELY RESPONSIBLE FOR THE COST OF REPAIR/REPLACEMENT OF ANY EXISTING UTILITIES DAMAGED DURING CONSTRUCTION.

   G. UPON LEARNING OF THE EXISTENCE AND/OR LOCATIONS OF ANY UNDERGROUND FACILITIES NOT SHOWN OR SHOWN INACCURATELY ON THE PLANS OR NOT PROPERLY MARKED BY THE UTILITY OWNER, IMMEDIATELY NOTIFY THE UTILITY OWNER AND THE ENGINEER BY TELEPHONE AND IN WRITING.

   H. UTILITY RELOCATIONS REQUIRED FOR THE CONSTRUCTION OF THE PROJECT FACILITIES WILL BE PERFORMED BY THE UTILITY COMPANY, UNLESS OTHERWISE NOTED.

5. IF DISCREPANCIES ARE DISCOVERED BETWEEN THE CONDITIONS EXISTING IN THE FIELD AND THE INFORMATION SHOWN ON THESE DRAWINGS, NOTIFY THE ENGINEER PRIOR TO PROCEEDING WITH CONSTRUCTION.

6. IT SHALL BE THE RESPONSIBILITY OF THE CONTRACTOR TO BE FULLY INFORMED OF AND TO COMPLY WITH ALL LAWS, ORDINANCES, CODES, REQUIREMENTS AND STANDARDS WHICH IN ANY MANNER AFFECT THE COURSE OF CONSTRUCTION OF THIS PROJECT, THOSE ENGAGED OR EMPLOYED IN THE CONSTRUCTION AND THE MATERIALS USED IN THE CONSTRUCTION.

7. ANY TESTS, INSPECTIONS, SPECIAL OR OTHERWISE, THAT ARE REQUIRED BY THE BUILDING CODES, LOCAL BUILDING DEPARTMENTS, OR THESE PLANS, SHALL BE DONE BY AN INDEPENDENT INSPECTION COMPANY. JOB SITE VISITS BY THE ENGINEER DO NOT CONSTITUTE AN OFFICIAL INSPECTION. IT IS THE CONTRACTOR'S RESPONSIBILITY TO ENSURE THAT THE REQUIRED TESTS AND INSPECTIONS ARE PERFORMED.

8. PROJECT SCHEDULE: PRIOR TO COMMENCEMENT OF WORK, SUBMIT TO THE ENGINEER FOR REVIEW AND APPROVAL A DETAILED CONSTRUCTION SCHEDULE. DO NOT BEGIN ANY CONSTRUCTION WORK UNTIL THE PROJECT SCHEDULE AND WORK PLAN IS APPROVED BY THE ENGINEER. ALL CONSTRUCTION SHALL BE CLOSELY COORDINATED WITH THE ENGINEER SO THAT THE QUALITY OF WORK CAN BE CHECKED FOR APPROVAL. PURSUE WORK IN A CONTINUOUS AND DILIGENT MANNER TO ENSURE A TIMELY COMPLETION OF THE PROJECT.

9. THE CONTRACTOR SHALL BE RESPONSIBLE FOR DESIGN, PERMITTING, INSTALLATION, AND MAINTENANCE OF ANY AND ALL TRAFFIC CONTROL MEASURES DEEMED NECESSARY.

10. THE CONTRACTOR SHALL BE RESPONSIBLE FOR GENERAL SAFETY DURING CONSTRUCTION. ALL WORK SHALL CONFORM TO PERTINENT SAFETY REGULATIONS AND CODES. THE CONTRACTOR SHALL BE SOLELY AND COMPLETELY RESPONSIBLE FOR FURNISHING, INSTALLING, AND MAINTAINING ALL WARNING SIGNS AND DEVICES NECESSARY TO SAFEGUARD THE GENERAL PUBLIC AND THE WORK, AND PROVIDE FOR THE PROPER AND SAFE ROUTING OF VEHICULAR AND PEDESTRIAN TRAFFIC DURING THE PERFORMANCE OF THE WORK. THE CONTRACTOR SHALL BE SOLELY AND COMPLETELY RESPONSIBLE FOR COMPLIANCE WITH ALL APPLICABLE PROVISIONS OF OSHA IN THE CONSTRUCTION PRACTICES FOR ALL EMPLOYEES DIRECTLY ENGAGED IN THE CONSTRUCTION OF THIS PROJECT.

11. CONSTRUCTION CONTRACTOR AGREES THAT IN ACCORDANCE WITH GENERALLY ACCEPTED CONSTRUCTION PRACTICES, CONSTRUCTION CONTRACTOR WILL BE REQUIRED TO ASSUME SOLE AND COMPLETE RESPONSIBILITY FOR JOB SITE CONDITIONS DURING THE COURSE OF CONSTRUCTION OF THE PROJECT, INCLUDING SAFETY OF ALL PERSONS AND PROPERTY; THAT THIS REQUIREMENT SHALL BE MADE TO APPLY CONTINUOUSLY AND NOT BE LIMITED TO NORMAL WORKING HOURS, AND CONSTRUCTION CONTRACTOR FURTHER AGREES TO DEFEND, INDEMNIFY AND HOLD DESIGN PROFESSIONAL HARMLESS FROM ANY AND ALL LIABILITY, REAL OR ALLEGED, IN CONNECTION WITH THE PERFORMANCE OF WORK ON THIS PROJECT, EXCEPTION LIABILITY ARISING FROM THE SOLE NEGLIGENCE OF DESIGN PROFESSIONAL. NEITHER THE PROFESSIONAL ACTIVITIES OF CONSULTANT NOR THE PRESENCE OF CONSULTANT OR HIS OR HER EMPLOYEES OR SUB-CONSULTANTS AT A CONSTRUCTION SITE SHALL RELIEVE THE CONTRACTOR AND ITS SUBCONTRACTORS OF THEIR RESPONSIBILITIES INCLUDING, BUT NOT LIMITED TO, CONSTRUCTION MEANS, METHODS, SEQUENCE, TECHNIQUES OR PROCEDURES NECESSARY FOR PERFORMING, SUPERINTENDING OR COORDINATING ALL PORTIONS OF THE WORK OF CONSTRUCTION IN ACCORDANCE WITH THE CONTRACT DOCUMENTS AND APPLICABLE HEALTH OR SAFETY REQUIREMENTS OF ANY REGULATORY AGENCY OR OF STATE LAW.

12. MAINTAIN A CURRENT, COMPLETE, AND ACCURATE RECORD OF ALL AS-BUILT DEVIATIONS FROM THE CONSTRUCTION AS SHOWN ON THESE DRAWINGS AND SPECIFICATIONS, FOR THE PURPOSE OF PROVIDING THE ENGINEER OF RECORD WITH A BASIS FOR THE PREPARATION OF RECORD DRAWINGS.

13. MAINTAIN THE SITE IN A NEAT AND ORDERLY MANNER THROUGHOUT THE CONSTRUCTION PROCESS. STORE ALL MATERIALS WITHIN APPROVED STAGING AREAS.

14. PROVIDE, AT CONTRACTOR'S SOLE EXPENSE, ALL MATERIALS, LABOR AND EQUIPMENT REQUIRED TO COMPLY WITH ALL APPLICABLE PERMIT CONDITIONS AND REQUIREMENTS.

15. CONTRACTOR SHALL BE RESPONSIBLE FOR ALL CONSTRUCTION STAKING AND LAYOUT, UNLESS OTHERWISE SPECIFIED.

16. THE CONTRACTOR SHALL BE RESPONSIBLE FOR THE PROTECTION AND PRESERVATION OF ALL SURVEY MONUMENTS OR PROPERTY CORNERS. DISTURBED MONUMENTS SHALL BE RESTORED BACK TO THEIR ORIGINAL LOCATION AND SHALL BE CERTIFIED BY A REGISTERED CIVIL ENGINEER OR LAND SURVEYOR AT THE SOLE EXPENSE OF THE CONTRACTOR.

17. TREE DIMENSIONS: TRUNK DIAMETERS SHOWN REPRESENT DIAMETER AT BREAST HEIGHT (DBH), MEASURED IN INCHES. DBH IS MEASURED 4.5 FT ABOVE GROUND FOR SINGLE TRUNKS AND TRUNKS THAT SPLIT INTO SEVERAL STEMS CLOSE TO THE GROUND. THE DBH FOR TREES THAT SPLIT INTO SEVERAL STEMS CLOSE TO THE GROUND MAY BE CONSOLIDATED INTO A SINGLE DBH BY TAKING THE SQUARE ROOT OF THE SUM OF ALL SQUARED STEM DBH'S, UNLESS OTHERWISE NOTED. WHERE TREES FORK NEAR BREAST HEIGHT, TRUNK DIAMETER IS MEASURED AT THE NARROWEST PART OF THE MAIN STEM BELOW THE FORK. FOR TREES ON A SLOPE, BREAST HEIGHT IS REFERENCED FROM THE UPPER SIDE OF THE SLOPE. FOR LEANING TREES, BREAST HEIGHT IS MEASURED ON THE SIDE THAT THE TREE LEANS TOWARD. TREES WITH DBH LESS THAN 8" ARE TYPICALLY NOT SHOWN.

    $12"P = 12"\ DBH\ PINE$

18. TREE SPECIES ARE IDENTIFIED WHEN KNOWN. HOWEVER, FINAL DETERMINATION SHOULD BE MADE BY A QUALIFIED BOTANIST. REFER TO THE LEGEND FOR TREE SPECIES SYMBOLS.

19. TREE TRUNK DIMENSIONS MAY BE SHOWN OUT-OF-SCALE FOR PLOTTING CLARITY. CAUTION SHOULD BE USED IN DESIGNING NEAR TREE TRUNKS. THERE ARE LIMITATIONS ON FIELD ACCURACY, DRAFTING ACCURACY, MEDIUM STRETCH AS WELL AS THE "SPREAD" OR "LEANING" OF TREES. REQUEST ADDITIONAL TOPOGRAPHIC DETAIL WHERE CLOSE TOLERANCES ARE ANTICIPATED. INDIVIDUAL TREES ARE NOT TYPICALLY LOCATED WITHIN DRIPLINE CANOPY AREAS SHOWN.

20. WILLOWS TO BE REMOVED SHALL BE TRIMMED, TRANSPLANTED, AND UTILIZED IN THE REVEGETATION PLAN.

21. ALL STANDARD STREET MONUMENTS, LOT CORNER PIPES, AND OTHER PERMANENT MONUMENTS DISTURBED DURING THE PROCESS OF CONSTRUCTION SHALL BE REPLACED AND A RECORD OF SURVEY OR CORNER RECORD PER SECTION 8771 OF THE PROFESSIONAL LAND SURVEYORS ACT FILED BEFORE ACCEPTANCE OF THE IMPROVEMENTS BY THE COUNTY OF SANTA CRUZ, COPIES OF ANY RECORD OF SURVEY OR CORNER RECORDS SHALL BE SUBMITTED TO THE COUNTY.

22. CONTRACTOR IS REQUIRED TO ASSUME SOLE AND COMPLETE RESPONSIBILITY FOR JOB SITE CONDITIONS DURING THE COURSE OF CONSTRUCTION OF THE PROJECT, INCLUDING SAFETY OF ALL PERSONS AND PROPERTY; THAT THIS REQUIREMENT SHALL BE MADE TO APPLY CONTINUOUSLY AND NOT BE LIMITED TO NORMAL WORKING HOURS.

23. THE CONTRACTOR SHALL CONFORM TO THE RULES AND REGULATIONS OF THE CONSTRUCTION SAFETY ORDERS OF THE STATE DIVISION OF OCCUPATIONAL SAFETY AND HEALTH PERTAINING TO EXCAVATION AND TRENCHES PER SECTION 306 OF THE STANDARD PROVISIONS.

24. AT ALL TIMES DURING CONSTRUCTION AND UNTIL FINAL COMPLETION AND ACCEPTANCE OF THE WORK, THE CONTRACTOR SHALL PREVENT THE FORMATION OF AN AIRBORNE DUST NUISANCE IN SUCH A MANNER THAT IT WILL CONTAIN DUST PARTICLES TO THE IMMEDIATE SURFACE OF THE WORK PER SECTION 7-8 OF THE STANDARD PROVISIONS. THE CONTRACTOR SHALL PERFORM SUCH TREATMENT WITHIN 2 HOURS AFTER NOTIFICATION BY THE COUNTY THAT AN AIRBORNE NUISANCE EXISTS.

25. THE EVENT THAT HUMAN REMAINS AND/OR CULTURAL MATERIALS ARE FOUND, ALL PROJECT-RELATED CONSTRUCTION SHALL CEASE WITHIN A 100-FOOT RADIUS. THE CONTRACTOR SHALL, PURSUANT TO SECTION 7050.5 OF THE HEALTH AND SAFETY CODE, AND SECTION 5097.94 OF THE PUBLIC RESOURCES CODE OF THE STATE OF CALIFORNIA, NOTIFY THE SANTA CRUZ COUNTY CORONER IMMEDIATELY.

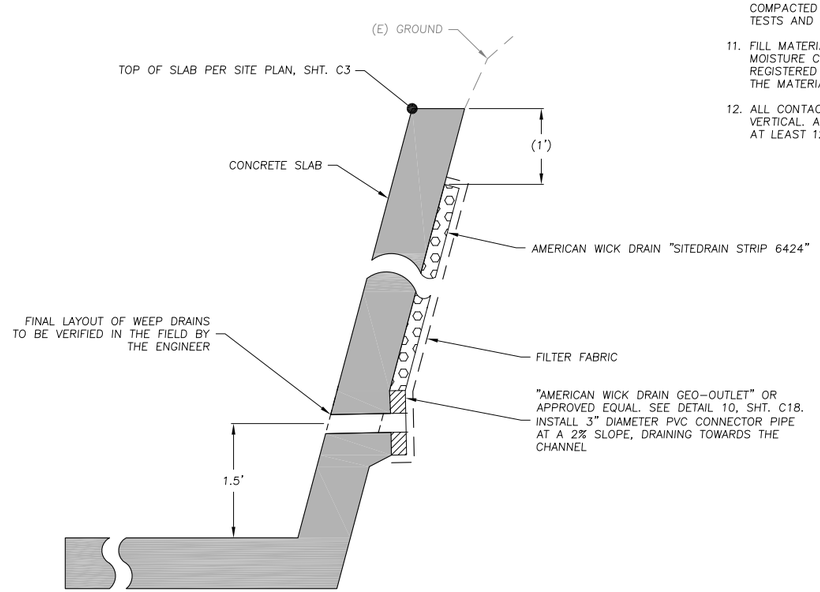

WEEP DRAIN DETAIL (10 / C3)
N.T.S.

EARTHWORK NOTES

1. ALL GRADING SHALL COMPLY WITH THE APPLICABLE REQUIREMENTS OF THE SANTA CRUZ COUNTY GRADING ORDINANCE.

   PRIOR TO PERFORMING ANY WORK, THE CONTRACTOR SHALL BE FAMILIAR WITH THE GEOTECHNICAL INVESTIGATION. IN THE EVENT OF DISCREPANCY BETWEEN THE REPORT AND THE NOTES HEREIN, THE REPORT SHALL PREVAIL. IT SHALL BE THE RESPONSIBILITY OF THE CONTRACTOR TO VISIT THE SITE AND MAKE HIS OWN INTERPRETATIONS WITH REGARD TO MATERIALS, METHODS AND EQUIPMENT NECESSARY TO PERFORM THE WORK REQUIRED FOR THIS PROJECT.

2. GRADING SUMMARY:
   TOTAL CUT VOLUME = 170 CY
   TOTAL FILL VOLUME = 0 CY
   NET CUT = 170 CY

   THE ABOVE QUANTITIES ARE APPROXIMATE IN-PLACE VOLUMES CALCULATED AS THE DIFFERENCE BETWEEN EXISTING GROUND AND THE PROPOSED FINISH GRADE, PREPARED FOR PERMITTING PURPOSES ONLY. EXISTING GROUND IS DEFINED BY THE TOPOGRAPHIC CONTOURS AND/OR SPOT ELEVATIONS ON THE PLAN. PROPOSED FINISH GRADE IS DEFINED AS THE DESIGN SURFACE ELEVATION OF WORK TO BE CONSTRUCTED. THE QUANTITIES HAVE NOT BEEN FACTORED TO INCLUDE ALLOWANCES FOR BULKING, CLEARING AND GRUBBING, SUBSIDENCE, SHRINKAGE, OVER EXCAVATION, AND RECOMPACTION, UNDERGROUND UTILITY AND SUBSTRUCTURE SPOILS AND CONSTRUCTION METHODS.

   THE CONTRACTOR SHALL PERFORM AN INDEPENDENT EARTHWORK ESTIMATE FOR THE PURPOSE OF PREPARING BID PRICES FOR EARTHWORK. THE BID PRICE SHALL INCLUDE COSTS FOR ANY NECESSARY IMPORT AND PLACEMENT OF EARTH MATERIALS OR THE EXPORT AND PROPER DISPOSAL OF EXCESS OR UNSUITABLE EARTH MATERIALS.

3. PRIOR TO COMMENCING WORK, ALL AREAS TO REMAIN UNDISTURBED SHALL BE ADEQUATELY PROTECTED WITH TEMPORARY FENCING.

4. DO NOT DISTRURB AREAS OUTSIDE OF THE DESIGNATED LIMITS OF DISTURBANCE, UNLESS AUTHORIZED IN WRITING BY THE ENGINEER. ALL WORK ASSOCIATED WITH RESTORATION AND REVEGETATION OF DISTURBED AREAS OUTSIDE THE DESIGNATED LIMITS OF DISTURBANCE, AS SHOWN ON THE DRAWINGS, SHALL BE BORN SOLELY BY THE CONTRACTOR.

5. ALL EXCESS SOILS SHALL BE REMOVED TO AN APPROVED DUMP SITE OR DISPOSED OF ON SITE AT A LOCATION TO BE APPROVED BY THE ENGINEER, IN A MANNER THAT WILL NOT CAUSE EROSION,

6. CLEARING AND GRUBBING, SUBGRADE PREPARATION AND EARTHWORK SHALL BE PERFORMED IN ACCORDANCE WITH SECTION 19 OF THE STANDARD SPECIFICATIONS, THESE DRAWINGS, AND THE TECHNICAL SPECIFICATIONS.

7. PRIOR TO STARTING WORK ON THE PROJECT, THE CONTRACTOR SHALL SUBMIT FOR ACCEPTANCE BY THE ENGINEER A HAZARDOUS MATERIALS CONTROLS AND SPILL PREVENTION PLAN. THE PLAN SHALL INCLUDE PROVISIONS FOR PREVENTING HAZARDOUS MATERIALS FROM CONTAMINATING SOIL OR ENTERING WATER COURSES, AND SHALL ESTABLISH A SPILL PREVENTION AND COUNTERMEASURE PLAN.

8. UNSUITABLE SOIL OR MATERIALS, NOT TO BE INCLUDED IN THE WORK INCLUDE:

   A. ORGANIC MATERIALS SUCH AS PEAT, MULCH, ORGANIC SILT OR SOD.
   B. SOILS CONTAINING EXPANSIVE CLAYS.
   C. MATERIAL CONTAINING EXCESSIVE MOISTURE.
   D. POORLY GRADED COURSE MATERIAL, PARTICLE SIZE IN EXCESS OF 6 INCHES.
   E. MATERIAL WHICH WILL NOT ACHIEVE SPECIFIED DENSITY OR BEARING.

9. FINE GRADING ELEVATIONS AND SLOPES NOT SHOWN SHALL BE DETERMINED BY THE CONTRACTOR IN THE FIELD TO OBTAIN DRAINAGE IN THE DIRECTION INDICATED. ALL FINAL GRADING SHALL BE SUBJECT TO APPROVAL OF THE ENGINEER.

10. THE TOP 6" OF SUBGRADE UNDER ALL PAVED SURFACES SUBJECT TO VEHICULAR USE SHALL BE COMPACTED TO A MINIMUM OF 95% RELATIVE COMPACTION, IN ACCORDANCE WITH ASTM-D1557. ALL OTHER FILL TO BE COMPACTED TO A MINIMUM OF 90% MAXIMUM DENSITY AS DETERMINED BY ASTM-D1557 AND SO CERTIFIED BY TESTS AND REPORTS FROM THE CIVIL ENGINEER IN CHARGE OF THE GRADING CERTIFICATION.

11. FILL MATERIAL SHALL BE SPREAD IN LIFTS OF APPROXIMATELY 8 INCHES, MOISTENED OR DRIED TO NEAR OPTIMUM MOISTURE CONTENT AND RECOMPACTED. THE MATERIALS FOR ENGINEERED FILL SHALL BE APPROVED BY A REGISTERED CIVIL ENGINEER. ANY IMPORTED MATERIALS MUST BE APPROVED BEFORE BEING BROUGHT TO THE SITE. THE MATERIALS USED SHALL BE FREE OF ORGANIC MATTER AND OTHER DELETERIOUS MATERIALS.

12. ALL CONTACT SURFACES BETWEEN ORIGINAL GROUND AND RECOMPACTED FILL SHALL BE EITHER HORIZONTAL OR VERTICAL. ALL ORGANIC MATERIAL SHALL BE REMOVED AND THE REMAINING SURFACE SCARIFIED TO A DEPTH OF AT LEAST 12 INCHES, UNLESS DEEPER EXCAVATION IS REQUIRED BY THE ENGINEER.

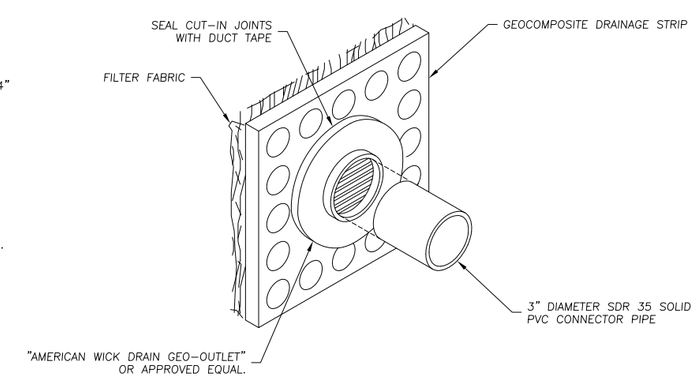

NOTES:
1. INSTALL PER MANUFACTURER'S RECOMMENDATIONS.
2. DRAIN GRATE INSTALLATION SHALL NOT DISRUPT FILTER FABRIC

DRAIN GRATE DETAIL (11 / C18)
N.T.S.

WATERWAYS CONSULTING INC.
509A SWIFT ST.
SANTA CRUZ, CA 95060
PH:(831)421-9291 // FAX:(888)819-6847
WWW.WATWAYS.COM

9/9/22
DATE

REGISTERED PROFESSIONAL ENGINEER MATT W. WELD No. 62235 Exp. 9-30-23 CIVIL STATE OF CALIFORNIA

MATT W. WELD

PREPARED AT THE REQUEST OF:
SAN LORENZO VALLEY WATER DISTRICT

GENERAL NOTES AND DETAILS

FALL CREEK FISH LADDER IMPROVEMENT PLAN
100% DESIGN SUBMITTAL

DESIGNED BY:	M.W.
DRAWN BY:	G.G.
CHECKED BY:	M.W.
DATE:	09-09-22
JOB NO.:	13-054

BAR IS ONE INCH ON ORIGINAL DRAWING, ADJUST SCALES FOR REDUCED PLOTS
0 1"

ABBREVIATIONS

A	AMPERES
AC	ALTERNATING CURRENT
AICS	AMPERES INTERRUPTING CAPACITY, SYMMETRICAL
AWG	AMERICAN WIRE GAUGE
BC	BARE COPPER
C	CONDUIT
CB	CIRCUIT BREAKER
CO	CONDUIT ONLY
CKT	CIRCUIT
CPT	CONTROL POWER TRANSFORMER
CT	CURRENT TRANSFORMER
DP	DEEP
DC	DIRECT CURRENT
DISC	DISCONNECT
DWG	DRAWING
E	EXISTING
ELEV	ELEVATION
G, GND	GROUND
GFCI	GROUND FAULT CURRENT INTERUPTING
GRS	GALVANIZED RIGID STEEL
HDG	HOT DIPPED GALVANIZED
HH	HANDHOLE
HOA	HAND OFF AUTOMATIC
HP	HORSEPOWER
HPS	HIGH PRESSURE SODIUM
HR	HOUR
Hz	HERTZ
JB	JUNCTION BOX
KVA	KILOVOLT AMPERES
KW	KILOWATT
LA	LIGHTING ARRESTOR
LTG	LIGHTING
MT'D	MOUNTED
MA	MILLIAMPERE
MCC	MOTOR CONTROL CENTER
MCB	MAIN CIRCUIT BREAKER
MIN	MINIMUM
N	NEUTRAL
NC	NORMAL CLOSED
NO	NORMAL OPEN
NTS	NOT TO SCALE
O/L'S	OVERLOADS
P	POLE
PB	PULL BOX, PUSH BUTTON
PH, ø	PHASE
PLC	PROGRAMMABLE LOGIC CONTROLLER
PS	PRESSURE SWITCH
PT	POTENTIAL TRANSFORMER
PVC	POLYVINYL CHLORIDE
RECP	RECEPTACLE
RGS	RIGID STEEL CONDUIT
RVSS	REDUCED VOLTAGE SOLID STATE
SS	STAINLESS STEEL
SW	SWITCH
TB	TERMINAL BOARD
TEL. CO.	TELEPHONE COMPANY
TSP	TWISTED SHIELDED PAIR
TYP	TYPICAL
UON	UNLESS OTHERWISE NOTED
UG	UNDERGROUND
V	VOLT
W	WIRE, WIDE
W/	WITH
WP	WEATHERPROOF
XFMR	TRANSFORMER

ELECTRICAL SYMBOLS – PLANS

CLG.	WALL	FLR.	SYMBOLS DESCRIPTION
			DUPLEX RECEPTACLE *
	J		JUNCTION BOX
			AREA FLOOD LIGHT AND POLE
	+18"		INDICATES HEIGHT FROM FINISHED GRADE TO CENTERLINE OF DEVICE
	*		+ 18" U.O.N.
	HH		HANDHOLE
			DISCONNECT SWITCH SIZE AS NOTED ON PLANS.
			CONTROL STATION, SEE SCHEMATIC DIAGRAM
			FEEDER DESIGNATION SEE SCHEDULE OR ONE LINE DIAGRAM FOR SIZE
			CONDUIT IN SLAB OR UNDER CONCRETE CAP, THREE CONDUITS OR LESS
			CONCRETE ENCASED DUCT BANK FOUR CONDUITS OR MORE
			CONDUIT EXPOSED
			QUANTITY #12 WIRE 3/4"C U.O.N. CURVE LINE INDICATES GROUND WIRE
	#10		WIRE SIZE OTHER THAN #12 CURVE LINE INDICATES GROUND WIRE
	G		GROUNDING CONDUCTOR 36" BELOW GRADE, #4/0 U.O.N.
	G		EXOTHERMIC WELD CONNECTION
	A–1,3		HOMERUN TO PANEL A, CIRCUIT 1 AND 3
			CONDUIT BENDS TOWARD OBSERVER
			CONDUIT BENDS AWAY FROM OBSERVER
			CONDUIT STUB–OUT AND CAPPED
	J		FLEXIBLE CONDUIT CONNECTION
			CONDUIT SEAL (HAZARDOUS LOCATION)
			MOTOR CONNECTION
	GW		GROUND ROD, 3/4" x 10'–0" GW NEXT TO SYMBOL INDICATES GROUND ROD WITH GROUND WELL. SEE DETAIL, (GW)
	X / E–Y		DETAIL CALLOUT– X, DETAIL IDENTIFIER. Y– SHEET WHERE DETAIL IS DRAWN
			JUNCTION BOX OR PULLBOX
	(E)		EXISTING TO REMAIN, OR RELOCATED
	(RS)		EXISTING TO BE REMOVE AND SALVAGED.
	(D)		EXISTING TO BE DEMOLISHED.

GENERAL NOTES

1. ALL CONDUITS SHALL BE PVC COATED GALVANIZED RIGID STEEL UNLESS OTHERWISE NOTED.
2. MINIMUM SIZE CONDUCTOR SHALL BE #12 STRANDED COPPER. SOLID WIRE SHALL NOT BE USED.
3. ALL EXPOSED HARDWARE SHALL BE TYPE 316 STAINLESS.

ELECTRICAL SYMBOLS – SINGLE LINE DIAGRAM

KWH	UTILITY METERING, W/ KILOWATT HOUR
AM	AMMETER
VM	VOLTMETER
VS	VOLTMETER SWITCH
AS	AMMETER SWITCH
3	CURRENT TRANSFORMER, QUANTITY INDICATED
	POWER TRANSFORMER
100A MCP	CIRCUIT BREAKER, 3 POLE UNLESS NOTED MCP INDICATES MOTOR CIRCUIT PROTECTOR
4	MAGNETIC MOTOR STARTER, NEMA SIZE INDICATED FVNR=FULL–VOLTAGE NON–REVERSING 2S, 2W = 2 SPEED, 2 WINDING
	SWITCH
	FUSE
F	DISCONNECT SWITCH "F" INDICATES FUSED, SEE PLANS FOR RATING
15	MOTOR, 15 HORSEPOWER
G	GENERATOR
	SURGE ARRESTER
	LIGHTING ARRESTER
	GROUND
	DELTA CONNECTION
	WYE CONNECTION
PFR	POWER FAILURE RELAY
GFR	GROUND FAULT RELAY
	SPACE HEATER
	FLUORESCENT LIGHT FIXTURE
	VENTILATION FAN
	UTILITY SERVICE
VFD	SOLID STATE STARTER; RVSS OR VFD AS NOTED
JTB	JUNCTION TERMINAL BOX

POWER WIRE COLOR CODE

SYSTEM	PHASE A	PHASE B	PHASE C	NEUTRAL	GROUND
208/120V	BLACK	RED	BLUE	WHITE	GREEN
480/277V	BROWN	ORANGE	YELLOW	GRAY	GREEN
240/120V	BLACK	RED	----	WHITE	GREEN
240V	BLACK	RED	BLUE	WHITE	GREEN

POWER WIRE SPECIFICATIONS

1. COPPER CONDUCTORS WITH XHHW–2 INSULATION, U.O.N.

ELECTRICAL SYMBOLS – SCHEMATIC DIAGRAMS

NORMALLY OPEN	NORMALLY CLOSED	DEVICE
		CONTACT
		PUSH BUTTON SINGLE CIRCUIT MOMENTARY CONTACT
		PUSH BUTTON SINGLE CIRCUIT LOCK–OUT
		LIQUID FLOAT LEVEL SWITCH
		PRESSURE OR VACUUM SWITCH
		FLOW SWITCH
		TEMPERATURE SWITCH
		TIME CONTACT CONTACT ACTION RETARDED ON ENERGIZATION
		TIME CONTACT CONTACT ACTION RETARDED ON DE–ENERGIZATION
		SELECTOR SWITCH (H–O–A)
		MANUAL MOTOR STARTER
	O.L.	MOTOR OVERLOAD RELAY CONTACT
		MOTOR OVERLOAD HEATER
A		PILOT LIGHT R=RED, W=WHITE G=GREEN, A=AMBER
R		PILOT LIGHT–PUSH TO TEST
R		RELAY
TD		TIME DELAY RELAY
M		STARTER COIL
S		SOLENOID OPERATED VALVE
		MOTOR
		BELL OR BUZZER
ETM		ELAPSED TIME METER
		FUSE
		CONTROL POWER TRANSFORMER
		GROUND
		WIRING IN MOTOR STARTER OR CONTROL PANEL
		FIELD WIRING
		WIRE TERMINAL IN MOTOR STARTER OR CONTROL PANEL
		WIRE TERMINAL IN PLC
PFR		PHASE/POWER FAILURE RELAY
		SPACE HEATER
		RESISTOR
		CIRCUIT BREAKER

REVISIONS

REF.	DATE	BY	DESCRIPTION

JCC	9/9/22	DESIGNED BY / DATE
WCJ	9/9/22	DRAWN BY / DATE
JHR	9/9/22	CHECK BY / DATE

REGISTERED PROFESSIONAL ENGINEER JOHN C. CALLAN No. 14099 Exp. 6-30-23 ELECTRICAL STATE OF CALIFORNIA 9/9/22

WSC
805 AEROVISTA PLACE, SUITE 201 SAN LUIS OBISPO, CA 93401
PHONE: (805)457–8833 FAX: (805)888–2764

SAN LORENZO VALLEY WATER DISTRICT
BOULDER CREEK, CALIFORNIA

FALL CREEK FISH LADDER IMPROVEMENT PLAN

ELECTRICAL ABBREVIATIONS & SYMBOLS

BAR IS ONE INCH ON ORIGINAL DRAWING, ADJUST SCALES FOR REDUCED PLOTS
0 1"

E1

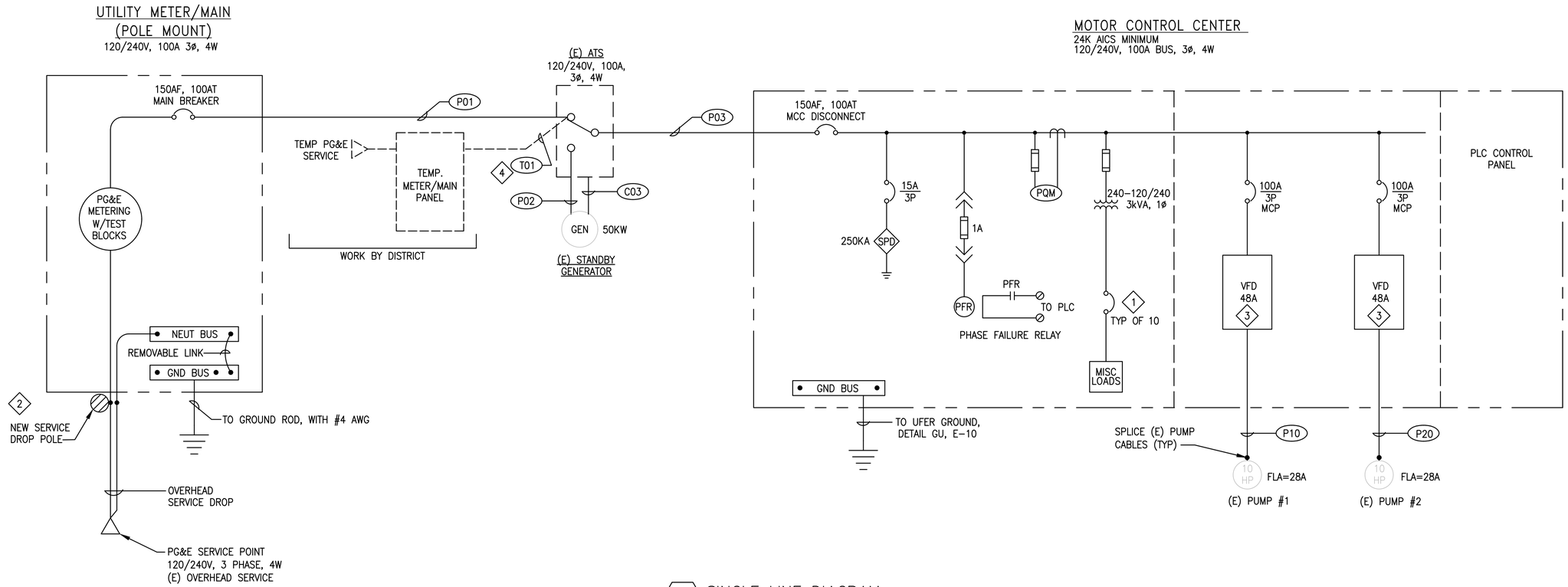

1 SINGLE LINE DIAGRAM
NO SCALE

TEMPORARY LOAD CALCULATIONS AT 240V

LOADS	HP	CONNECTED LOAD AMPS
PUMP #1	10	28
PUMP #2	10	28
MISC.		5
SUBTOTAL		61
25% OF CONNECTED LOAD		15
TOTAL AMPS AT 240V		76

PERMANENT LOAD CALCULATIONS AT 240V

LOADS	HP	CONNECTED LOAD AMPS
PUMP #1	15	42
PUMP #2	15	0 (5)
MISC.		5
SUBTOTAL		47
25% OF CONNECTED LOAD		12
TOTAL AMPS AT 240V		59

BREAKER SCHEDULE

DESCRIPTION	LOAD (VA)	BKR	CIR	CIR	BKR	LOAD (VA)	DESCRIPTION
WARRICK LEVEL CONTROLS	50	15A-1P	1	2	15A-1P	600	MCC FANS AND HEATERS - SECTIONS 1 & 3
PLUG STRIPS - DVR, MODEM, CCTV, SWITCH	700	15A-1P	3	4	20A-1P	200	SITE LIGHTS, PHOTO CONTROLS
PLC PANEL - UPS	750	20A-1P	5	6	15A-1P	100	BALANCE RAIN GAUGE
PUMP CONTROL CIRCUITS	300	15A-1P	7	8	15A-1P	200	MCC FANS AND HEATER - SECTION 2
GENERATOR BATTERY CHARGER	250	15A-1P	9	10	20A-1P	800	GENERATOR BLOCK HEATER

NOTES:

1. REFER TO BREAKER SCHEDULE THIS DRAWING, FOR 120 VAC BREAKER SIZE AND LOADS.
2. PERMANENT SERVICE TO UTILITY METER. COORDINATE SERVICE REQUIREMENTS WITH PG&E, PER PG&E GREENBOOK.
3. SIZE VFD'S FOR FUTURE 15HP (42 FLA) PUMPS.
4. PROVIDE TEMPORARY POWER CONDUIT AND CABLE "T01", FROM TEMPORARY METER/MAIN PANEL, UNTIL PERMANENT UTILITY METER/MAIN IS ENERGIZED BY PG&E.
5. FOR PERMANENT POWER, PUMPS ARE HARDWIRED INTERLOCKED SO ONLY ONE RUNS AT A TIME.

REVISIONS

REF.	DATE	BY	DESCRIPTION

JCC 9/9/22
DESIGNED BY DATE

WCJ 9/9/22
DRAWN BY DATE

JHR 9/9/22
CHECK BY DATE

REGISTERED PROFESSIONAL ENGINEER
JOHN C. CALLON
No. 14099
Exp. 6-30-23
ELECTRICAL
STATE OF CALIFORNIA
9/9/22

WSC
805 AEROVISTA PLACE, SUITE 201 SAN LUIS OBISPO, CA 93401
PHONE: (805)457-8833 FAX: (805)888-2764

SAN LORENZO VALLEY WATER DISTRICT
BOULDER CREEK, CALIFORNIA

FALL CREEK FISH LADDER IMPROVEMENT PLAN

SINGLE LINE DIAGRAM

BAR IS ONE INCH ON ORIGINAL DRAWING, ADJUST SCALES FOR REDUCED PLOTS
0 1"

E2

NOTES:

1. PROVIDE OUTDOOR RATED ENCLOSURE WITH SUN SHIELDS, PADLOCKABLE DOORS, INTERIOR LIGHTS, VENT FANS, AND FILTERED LOUVERS. PAINT TAN COLOR.
2. FINAL DIMENSIONS SHALL BE PER MCC SUPPLIER.
3. PROVIDE CUTOUTS AND BLANKING PLATES FOR FUTURE PUMP PROTECTION RELAYS, SIMILAR TO FLYGT MINI-CAS, ON INTERIOR SWING PANEL.
4. FIELD INSTALL EXISTING BALANCE PANEL ON SIDE OF MCC. MOUNT (E) ANTENNA WITH BRACKET TO MCC.
5. ROUTE PVC-GRS CONDUIT "C08" WITHIN 6" OF BOTTOM OF PANEL. PROVIDE INSULATED THROAT GROUNDING BUSHING.
6. PROVIDE SPACE IN CABINET FOR FUTURE EMERSION CONTROL WAVE PLC WITH CABLEFAST FIELD WIRE TERMINALS.
7. PLC AND CONTROLS SHALL BE SIMILAR TO EXISTING PANEL T-17526. LIQ5 PLC TO BE ETHERNET READY, BUT CONNECTED TO TELEPHONE LEASE LINE FOR SCADA COMMUNICATIONS.

NAMEPLATE NOTES:

1. EQUIPMENT NAMEPLATE WITH 1/2" ENGRAVED LETTERING (TYP). [X]
2. NAMEPLATES SHALL BE BLACK WITH WHITE ENGRAVED LETTERING.

NAMEPLATE SCHEDULE

TAG #	QTY	TYPE	SIZE	INSCRIPTION
1	1	PLATE	2" X 6"	PLC CONTROL PANEL SECTION
2	1	PLATE	2" X 6"	PUMP CONTROL SECTION
3	1	PLATE	2" X 6"	POWER DISTRIBUTION SECTION

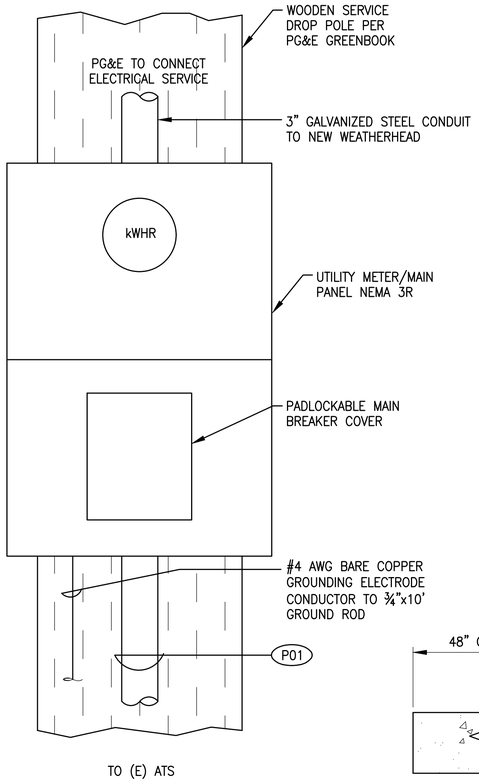

SERVICE DROP POLE
NOT TO SCALE

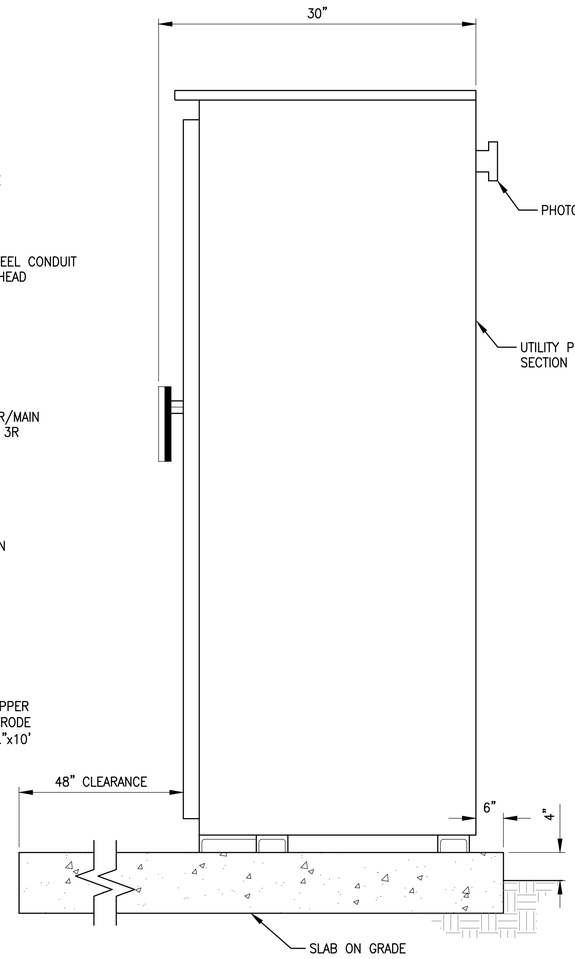

MCC RIGHT SIDE ELEVATION
NOT TO SCALE

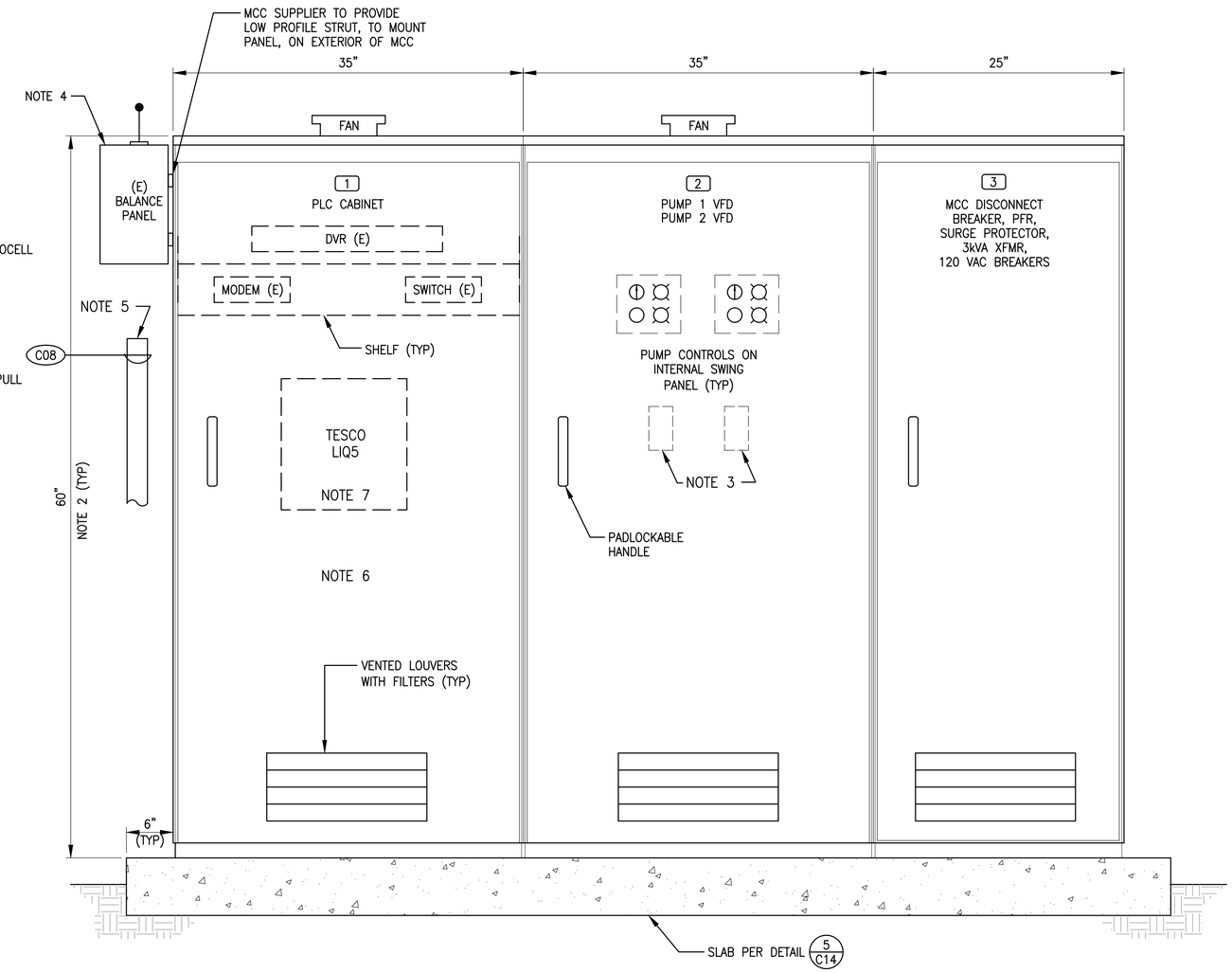

MCC FRONT ELEVATION
NOT TO SCALE

REVISIONS

REF.	DATE	BY	DESCRIPTION

JCC 9/9/22 DESIGNED BY DATE
WCJ 9/9/22 DRAWN BY DATE
JHR 9/9/22 CHECK BY DATE

REGISTERED PROFESSIONAL ENGINEER JOHN C. CALLON No. 14099 Exp. 6-30-23 ELECTRICAL STATE OF CALIFORNIA 9/9/22

WSC
805 AEROVISTA PLACE, SUITE 201 SAN LUIS OBISPO, CA 93401
PHONE: (805)457-8833 FAX: (805)888-2764

SAN LORENZO VALLEY WATER DISTRICT
BOULDER CREEK, CALIFORNIA

FALL CREEK FISH LADDER IMPROVEMENT PLAN

UTILITY METER & MCC ELEVATION

BAR IS ONE INCH ON ORIGINAL DRAWING, ADJUST SCALES FOR REDUCED PLOTS
0 1"

E3

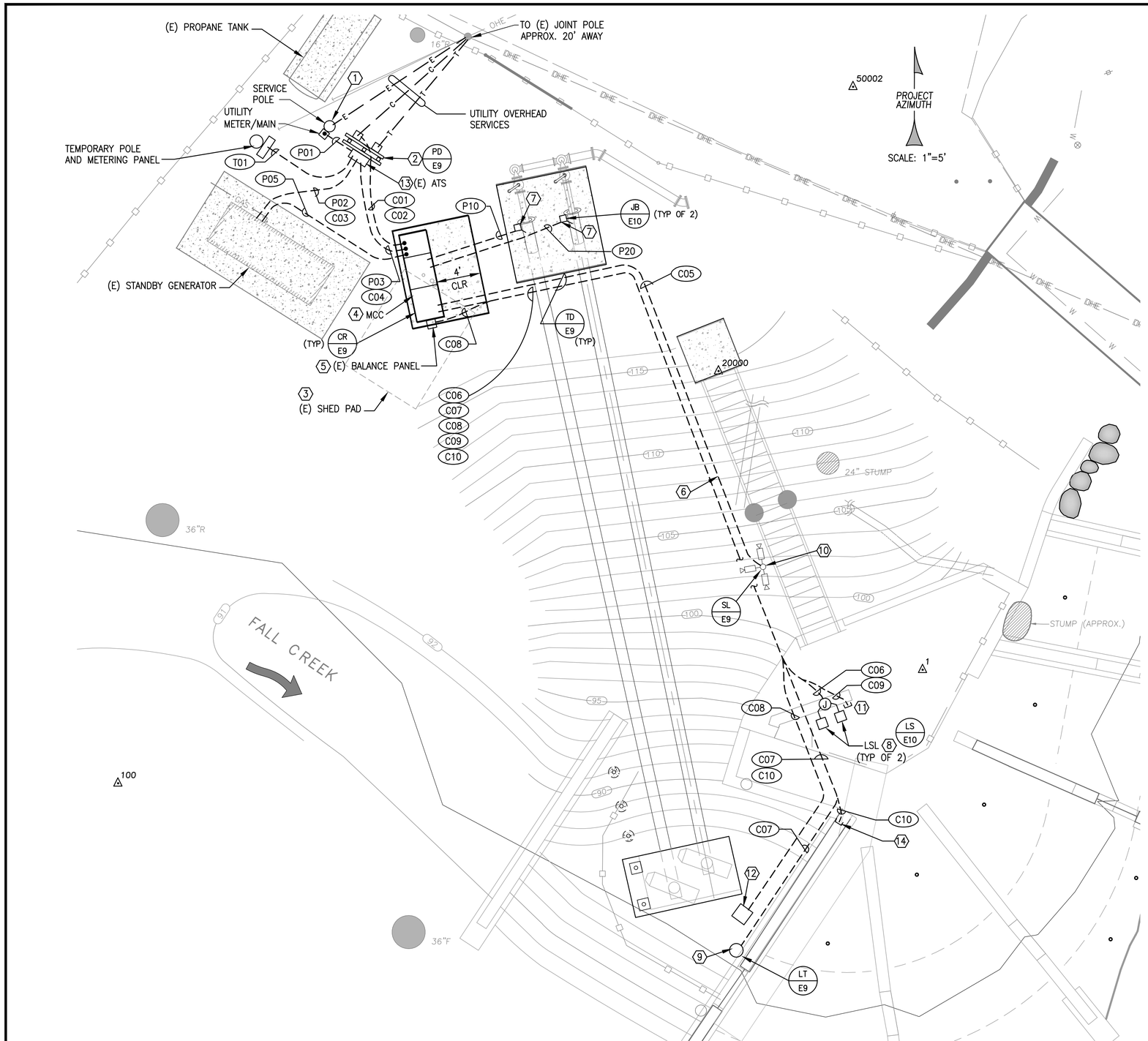

GENERAL NOTES:

1. CONTRACTOR IS RESPONSIBLE TO COORDINATE WITH ELECTRICAL, TELEPHONE AND CABLE UTILITIES FOR WORK SHOWN. SCHEDULE WORK TO MINIMIZE SHUTDOWNS.
2. CONTRACTOR IS RESPONSIBLE TO PROVIDE TEMPORARY POWER FOR CONSTRUCTION.
3. MCC SHALL BE INSTALLED, TESTED AND READY FOR OPERATION PRIOR TO CUTTING OVER ANY LOADS AND UTILITY SERVICES.
4. CONTRACTOR IS RESPONSIBLE TO COORDINATE LOCATION OF LEVEL SWITCH STILLING WELLS AT NEW INTAKE.
5. CONTRACTOR IS RESPONSIBLE TO COORDINATE LOCATION OF LEVEL TRANSMITTER STILLING WELL AND LOCATION OF BALANCE PANEL RAIN GAUGE AND STREAM FLOW EQUIPMENT WITH DISTRICT AT NEW OVERFLOW WEIR LOCATION.
6. ALL EXPOSED CONDUITS SHALL BE PVC COATED GALVANIZED RIGID STEEL. PROVIDE SEALTITE FLEXIBLE CONDUIT FOR FINAL 12" CONNECTION TO MOTOR CASING, LEVEL SWITCHES, LEVEL TRANSMITTER.
7. EXISTING PG&E METER NO. 1009452335, 120/240VAC, 3 PHASE, 4 WIRE, 100 AMPS. DISTRICT SHALL PROVIDE TEMPORARY PG&E POWER AND METER PANEL.
8. EXISTING CONTROL PANEL IS TESCO CONTROLS, INC., T-17526 (1996).
9. REFER TO "EQUIPMENT GROUNDING PLAN" ON E10 FOR SITE GROUNDING WORK AT MCC.
10. CONTRACTOR TO COORDINATE WITH DISTRICT FOR ANY EQUIPMENT TO BE SALVAGED, RELOCATED, OR MODIFIED PRIOR TO DEMOLITION.

KEY NOTES:

1. PROVIDE SERVICE POLE WITH WEATHERHEAD AND 3" GALVANIZED RIGID STEEL CONDUIT TO ACCEPT PERMANENT PG&E OVERHEAD SERVICE DROP. MOUNT UTILITY METER/MAIN ON POLE. GROUND PER DRAWING E2. COORDINATE WITH PG&E FOR POLE TYPE, POLE HEIGHT, BURIAL DEPTH, CONDUIT SIZE AND CABLING, OR PULLTAPE REQUIREMENTS.
2. PROVIDE EQUIPMENT STANCHION TO MOUNT NEW TELEPHONE ENCLOSURE (MPOE), AND CATV ENCLOSURE. EQUIPMENT SHALL MEET RESPECTIVE SERVING UTILITY REQUIREMENTS. GROUND PER DRAWING E8.
3. CONTRACTOR TO DEMOLISH EXISTING WOODEN SHED AND CONCRETE PAD. INSTALL NEW SLAB ON GRADE SIZED FOR 6" CLEARANCE ON BACK AND BOTH SIDES OF MCC TO SLAB EDGE, AND 48" IN FRONT OF MCC TO SLAB EDGE.
4. RELOCATE EXISTING CCTV SYSTEM HARDWARE FROM EXISTING SECURITY AND CATV PANELS TO NEW MCC, IN FIELD; INCLUDING DVR, ETHERNET SWITCH (FIREWALL) AND COMCAST MODEM.
5. RELOCATE EXISTING BALANCE PANEL WITH CELLULAR ANTENNA TO EXTERIOR OF MCC. CONNECT SIGNAL FROM NEW CREEK LEVEL TRANSMITTER AT WEIR, FOR FLOW MEASUREMENT, AND EXISTING RAIN GAUGE AND STREAM FLOW SIGNALS.
6. PROVIDE NEW 2" CONDUIT FOR CCTV SYSTEM BETWEEN MCC AND RELOCATED LIGHT POLE WITH CCTV CAMERAS. CONTRACTOR MAY PULL EXISTING CCTV CABLES IN NEW 2" CONDUIT, BUT MUST REPLACE ALL DAMAGED OR NON-FUNCTIONING CABLES BETWEEN CCTV CAMERAS AND DVR IN MCC, AT NO EXTRA COST, IF DAMAGED DURING PULLING.
7. PROVIDE 14" X 12" X 6" JUNCTION BOX, NEMA 3R, MOUNTED TO STRUTS FOR ROUTING SUBMERSIBLE PUMP CABLES THRU AND SPLICED TO CABLES CONTINUED TO MCC. HOFFMAN BULLETIN A51NF, OR APPROVED EQUAL. PROVIDE LOCK KIT FOR CLAMP COVER. BOX SHALL BE SIZED TO MEET NEC REQUIREMENTS BASED ON CONDUIT LAYOUT.
8. PROVIDE NEW WARRICK LOW LEVEL SWITCHES, INCLUDING FITTINGS AND PROBES, ON NEW STILLING WELLS. PROVIDE NEW CONDUITS, CABLES AND J-BOX FOR COMPLETE SYSTEM. REFER TO SCHEMATIC DRAWINGS. PROVIDE STILLING WELLS SIMILAR TO EXISTING. SECURE STILLING WELLS WITH HOT DIPPED GALVANIZED STRUT. LOW LEVEL SWITCH SHALL BE SET AT LOW CREEK LEVEL, JUST ABOVE MINIMUM PUMP SUBMERGENCE LEVEL PER EXISTING LEVEL SETTING. ROUTE 1" CONDUIT WITH CABLES FROM LEVEL FITTING TO MCC, WITHOUT SPLICES.
9. PROVIDE NEW LEVEL TRANSMITTER IN NEW STILLING WELL. LOCATION OF STILLING WELL AND NEW TRANSMITTER TO BE DETERMINED BY ENGINEER IN THE FIELD. ROUTE 1" CONDUIT WITH LEVEL TRANSMITTER CABLE, WITHOUT SPLICES, TO MCC. PROVIDE STILLING WELL SIMILAR TO EXISTING.
10. RELOCATE EXISTING LIGHT POLE WITH LIGHTS AND CAMERAS TO NEW STAIRWELL AND ANCHOR TO NEW CONCRETE BASE. COORDINATE EXACT LOCATION IN FIELD WITH DISTRICT.
11. CAP SPARE CONDUIT C09 6" ABOVE GRADE.
12. ROUTE CONDUIT C08 TO RELOCATED EXISTING BALANCE PANEL FIELD EQUIPMENT IN SIMILAR LOCATION TO EXISTING INSTALL.
13. RELOCATE (E) ATS TO BACK OF STANCHION. ROUTE NEW CONDUITS AND CABLES AS SHOWN.
14. CAP SPARE CONDUIT C10 ON WALKWAY.

REVISIONS

REF.	DATE	BY	DESCRIPTION

JCC	9/9/22
DESIGNED BY	DATE
WCJ	9/9/22
DRAWN BY	DATE
JHR	9/9/22
CHECK BY	DATE

REGISTERED PROFESSIONAL ENGINEER JOHN C. CALLON No. 14099 Exp. 6-30-23 ELECTRICAL STATE OF CALIFORNIA 9/9/22

WSC
805 AEROVISTA PLACE, SUITE 201 SAN LUIS OBISPO, CA 93401
PHONE: (805)457-8833 FAX: (805)888-2764

SAN LORENZO VALLEY WATER DISTRICT
BOULDER CREEK, CALIFORNIA

FALL CREEK FISH LADDER IMPROVEMENT PLAN

ELECTRICAL SITE PLAN

BAR IS ONE INCH ON ORIGINAL DRAWING, ADJUST SCALES FOR REDUCED PLOTS
0 1"

E4

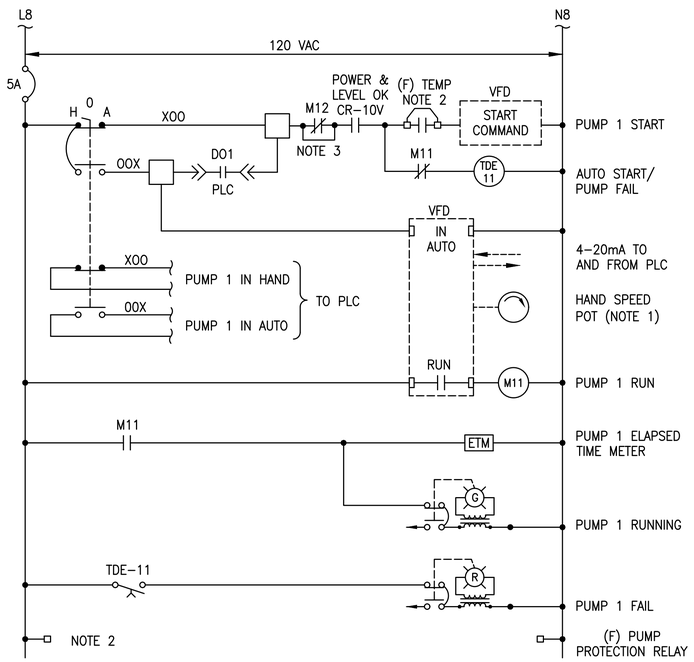

PUMP NO. 1 WIRING DIAGRAM

(NOTE 2)

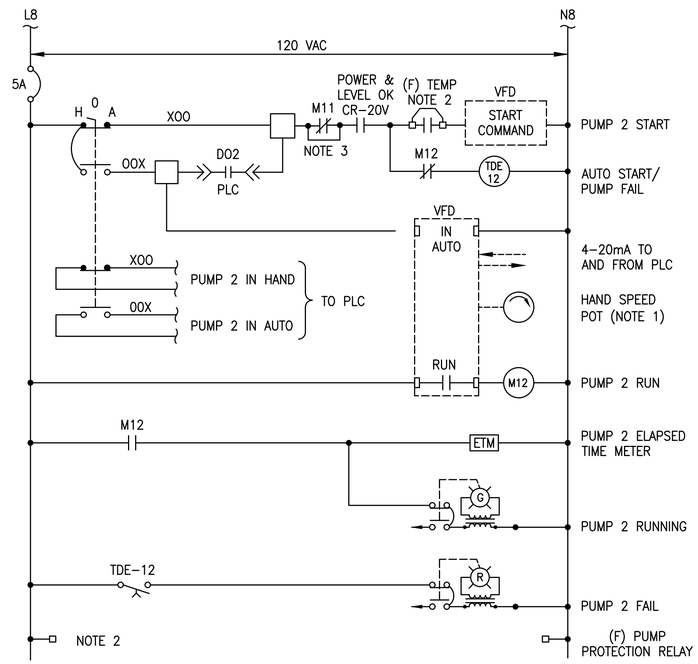

PUMP NO. 2 WIRING DIAGRAM

(NOTE 2)

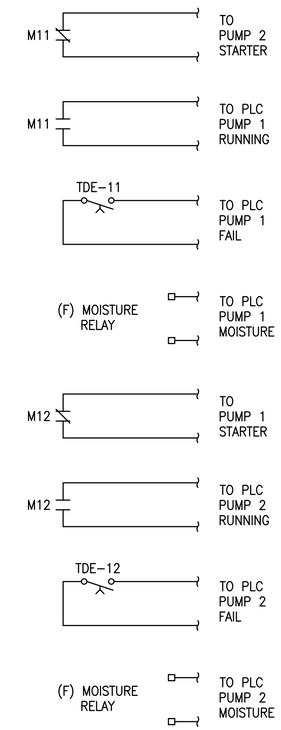

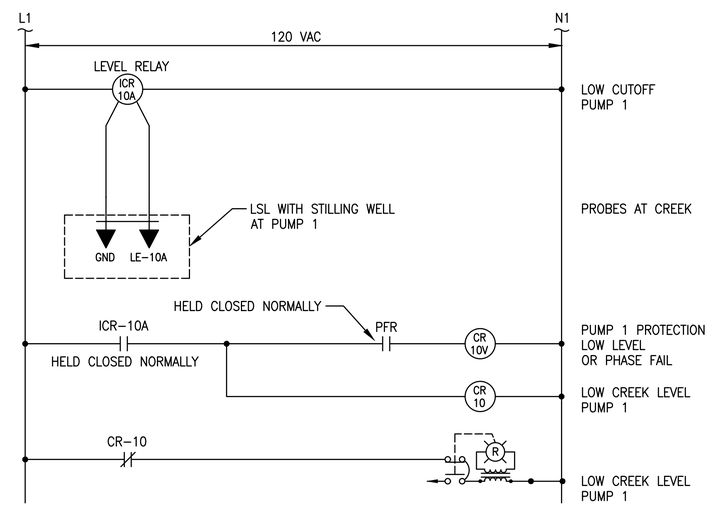

PUMP 1 LEVEL PERMISSIVE WIRING DIAGRAM

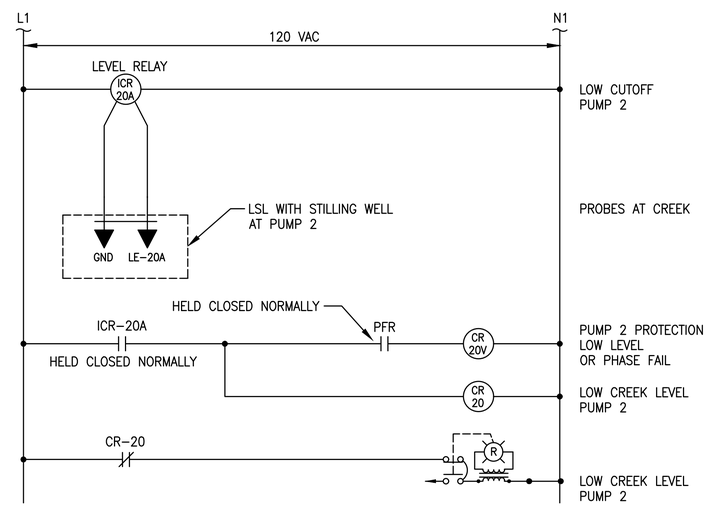

PUMP 2 LEVEL PERMISSIVE WIRING DIAGRAM

NOTES:

1. VFD SPEED SHALL BE FROM SPEED POT WHEN IN HAND AND 4-20mA SIGNAL FROM PLC WHEN IN AUTO. PROVIDE 4-20mA SPEED FEEDBACK FROM VFD TO PLC.
2. PROVIDE SPACE AND WIRING FOR PUMP MOISTURE AND MOTOR TEMPERATURE SENSOR RELAYS AND PROTECTION AS REQUIRED BY PUMP SUPPLIER. SUBMIT CONTROLS FOR APPROVAL.
3. PROVIDE JUMPER ACROSS CONTACT WHILE RUNNING (E) 10 HP PUMPS. REMOVE JUMPER FOR (F) 15 HP PUMPS.

REVISIONS

REF.	DATE	BY	DESCRIPTION

JCC	DESIGNED BY	9/9/22 DATE
WCJ	DRAWN BY	9/9/22 DATE
JHR	CHECK BY	9/9/22 DATE

REGISTERED PROFESSIONAL ENGINEER JOHN C. CALLON No. 14099 Exp. 6-30-23 ELECTRICAL STATE OF CALIFORNIA 9/9/22

WSC
805 AEROVISTA PLACE, SUITE 201 SAN LUIS OBISPO, CA 93401
PHONE: (805)457-8833 FAX: (805)888-2764

SAN LORENZO VALLEY WATER DISTRICT
BOULDER CREEK, CALIFORNIA

FALL CREEK FISH LADDER IMPROVEMENT PLAN

CONTROL WIRING DIAGRAMS

BAR IS ONE INCH ON ORIGINAL DRAWING, ADJUST SCALES FOR REDUCED PLOTS
0 1"

E5

CONDUIT AND CABLE SCHEDULE

CONDUIT NO.	CONDUIT SIZE	CABLE SIZE AND QUANTITY	FROM	TO	REMARKS
T01	1-1/2"	3#1/0, #6G	TEMPORARY METER/MAIN PANEL	(E) ATS	CONFIRM EXISTING PHASE ROTATION
P01	1-1/2"	3#1/0, #6G	UTILITY METER/MAIN PANEL	(E) ATS	CONNECT AFTER PG&E ENERGIZES PERMANENT METER
P02	1-1/2"	3#1/0, #6G	(E) STANDBY GENERATOR	(E) ATS	MATCH EXISTING PHASE ROTATION.
P03	1-1/2"	3#1/0, #6G	(E) ATS	MCC - DISCONNECT SECTION	
P04	1"	3#12, #12G	MCC - CONTROL SECTION	(E) LIGHTS ON EXISTING POLE	ROUTE CONDUIT UP POLE TO LIGHTS. PROVIDE CAST BOX FOR RECEPTACLE.
P05	1"	4#12, #12G	MCC - DISCONNECT SECTION	(E) STANDBY GENERATOR	TWO 120V CIRCUITS FOR BATTERY CHARGER AND BLOCK HEATER
P10	2"	3#4, #8G, 2-#14	(E) SUBMERSIBLE PUMP 1	MCC - VFD SECTION	VIA J-BOX, INCLUDES (F) TS, MS CABLES. CABLES SIZED FOR (F) PUMPS
P20	2"	3#4, #8G, 2-#14	(E) SUBMERSIBLE PUMP 2	MCC - VFD SECTION	VIA J-BOX, INCLUDES (F) TS, MS CABLES. CABLES SIZED FOR (F) PUMPS
C01	1"	4 PR TEL SERVICE CABLE	TELEPHONE ENCLOSURE (MPOE)	MCC - CONTROL SECTION	MPOE ON SERVICE POLE
C02	1"	COAX SERVICE CABLE	CATV SERVICE ENCLOSURE	MCC - CONTROL SECTION	CATV DROP ON SERVICE POLE
C03	1"	8-#14, #14G	(E) ATS	(E) STANDBY GENERATOR	GENERATOR CALL AND COMMON ALARM. 4 SPARES
C04	1"	10-#14, #14G	(E) ATS	MCC - CONTROL SECTION	ATS POSITIONS AND GENERATOR COMMON ALARM TO PLC. 4 SPARES
C05	2"	4-COAX AND 4 POWER CABLES	(E) CCTV CAMERAS ON POLE	MCC - CONTROL SECTION	ROUTE 2" CONDUIT UP POLE TO CAMERAS. NO SPLICES.
C06	1"	6-#12, #14G	J-BOX AT LSL SYSTEMS AT INTAKE	MCC - CONTROL SECTION	FIELD ROUTE CONDUIT. ROUTE 3-#12, #14G TO EACH LEVEL FITTING, 1 SPARE
C07	1"	LT MANU CABLE	LT AT CREEK WEIR	MCC - CONTROL SECTION	FIELD ROUTE CONDUIT, NO SPLICES
C08	2"	2 (E) CABLES, 2-#16 TWSP	(E) EQUIPMENT, STREAM FLOW	(E) BALANCE PANEL	SALVAGE EXISTING CABLES AND EQUIPMENT, REINSTALL EQUIPMENT & CABLES
C09	1"	PULLTAPE	CAT NEAR LSL SWITCHES AT INTAKE	MCC - CONTROL SECTION	SPARE CONDUIT, STUB UP AND CAP
C10	1"	PULLTAPE	CAP AT INTAKE	MCC - CONTROL SECTION	SPARE CONDUIT, STUB UP AND CAP

PLC I/O LIST

TAG NO.	DESCRIPTION	DISCRETE ON STATE, OR ANALOG RANGE	DISCRETE OFF STATE, OR ANALOG ENGR UNIT	EXISTING TESCO LIQ 5 I/O TYPE AND BIT ASSIGNMENT, OR NEW INPUT TYPE
YL-100	PUMP 1 RUNNING	RUNNING	NOT RUNNING	DIG IN #1
YL-200	PUMP 2 RUNNING	RUNNING	NOT RUNNING	DIG IN #2
ZS-100A	PUMP 1 IN HAND	HAND	NOT HAND	DIG IN #5
ZS-100B	PUMP 1 IN AUTO	AUTO	NOT AUTO	DIG IN #6
ZS-200A	PUMP 2 IN HAND	HAND	NOT HAND	DIG IN #7
ZS-200B	PUMP 2 IN AUTO	AUTO	NOT AUTO	DIG IN #8
YA-100A	PUMP 1 FAIL (FAIL TO RUN, MOTOR OVERTEMP)	ALARM	NORMAL	DIG IN #9
YA-200A	PUMP 1 FAIL (FAIL TO RUN, MOTOR OVERTEMP)	ALARM	NORMAL	DIG IN #10
YA-100B	PUMP 1 MOISTURE ALARM	ALARM	NORMAL	NEW DIGITAL INPUT
YA-200B	PUMP 2 MOISTURE ALARM	ALARM	NORMAL	NEW DIGITAL INPUT
LSL-001	CREEK LEVEL LOW (CR-10 PERMISSIVE) PUMP 1	NORMAL	ALARM	DIG IN #21
LSL-002	CREEK LEVEL LOW (CR-20 PERMISSIVE) PUMP 2	NORMAL	ALARM	NEW DIGITAL INPUT
EA-001	CONTROL PANEL - AC AND DC CONTROL POWER OK	NORMAL	ALARM	DIG IN #22
ZS-001	RTU RESET (PUSHBUTTON)	RESET	NORMAL	DIG IN #23
ZA-001	MCC - ANY DOOR OPEN (SERIES ALL DOOR SWITCHES)	NORMAL	ALARM	NEW DIGITAL INPUT
YA-001	MCC -(PFR) PHASE FAILURE/UNDERVOLTAGE ALARM	NORMAL	ALARM	NEW DIGITAL INPUT
ZS-002A	ATS IN NORMAL POSITION	NORMAL	ALARM	NEW DIGITAL INPUT
ZS-002B	ATS IN EMERGENCY POSITION	ALARM	NORMAL	NEW DIGITAL INPUT
ZA-003	GENERATOR COMMON ALARM	ALARM	NORMAL	NEW DIGITAL INPUT
YA-001	COMMON ALARM (TO STATUS LIGHT)	ALARM	NORMAL	DIG OUT #0
HS-100	PUMP 1 START COMMAND	START	STOP	DIG OUT #1
HS-200	PUMP 2 START COMMAND	START	STOP	DIG OUT #2
LT-001	LEVEL TRANSMITTER AT WEIR	0 - XX (MATCH EXISTING)	FEET OF H2O	NEW ANALOG INPUT 4-20mA
SI-100	PUMP 1 VFD SPEED FEEDBACK	0-100	PERCENT	NEW ANALOG INPUT 4-20mA
SI-200	PUMP 2 VFD SPEED FEEDBACK	0-100	PERCENT	NEW ANALOG INPUT 4-20mA
SC-100	PUMP 1 VFD SPEED COMMAND	0-100	PERCENT	NEW ANALOG OUTPUT 4-20mA
SC-200	PUMP 2 VFD SPEED COMMAND	0-100	PERCENT	NEW ANALOG OUTPUT 4-20mA

NOTES:

1. TESCO CONTROLS TO ADD NEW RTU POINTS TO DISTRICT SCADA SYSTEM.

REVISIONS

REF.	DATE	BY	DESCRIPTION

JCC 9/9/22 DESIGNED BY DATE

WCJ 9/9/22 DRAWN BY DATE

JHR 9/9/22 CHECK BY DATE

REGISTERED PROFESSIONAL ENGINEER JOHN C. CALLON No. 14099 Exp. 6-30-23 ELECTRICAL STATE OF CALIFORNIA 9/9/22

WSC
805 AEROVISTA PLACE, SUITE 201 SAN LUIS OBISPO, CA 93401
PHONE: (805)457-8833 FAX: (805)888-2764

SAN LORENZO VALLEY WATER DISTRICT
BOULDER CREEK, CALIFORNIA

FALL CREEK FISH LADDER IMPROVEMENT PLAN

CONDUIT AND CABLE SCHEDULE, PLC I/O LIST

BAR IS ONE INCH ON ORIGINAL DRAWING, ADJUST SCALES FOR REDUCED PLOTS
0 1"

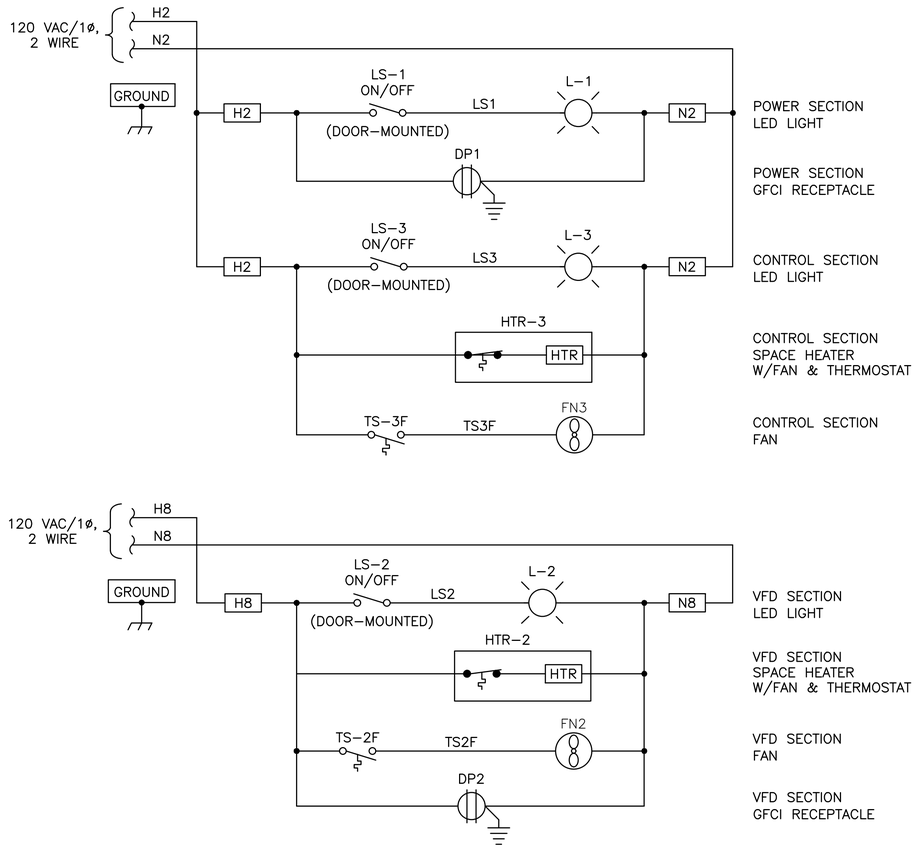

MCC

HEATERS, FANS, LIGHTS, & RECEPTACLES WIRING DIAGRAM

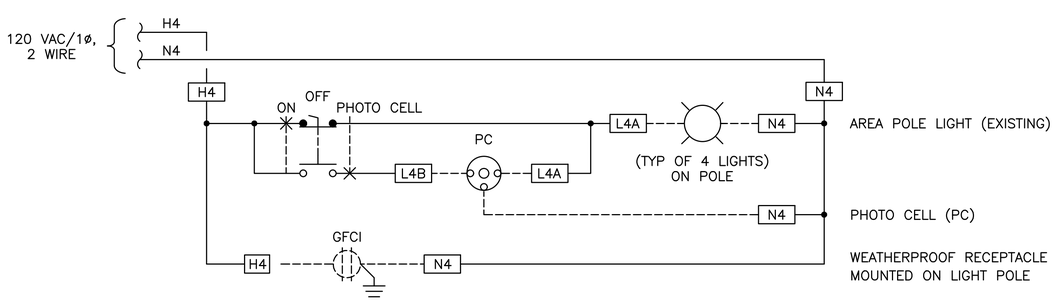

AREA LIGHTING

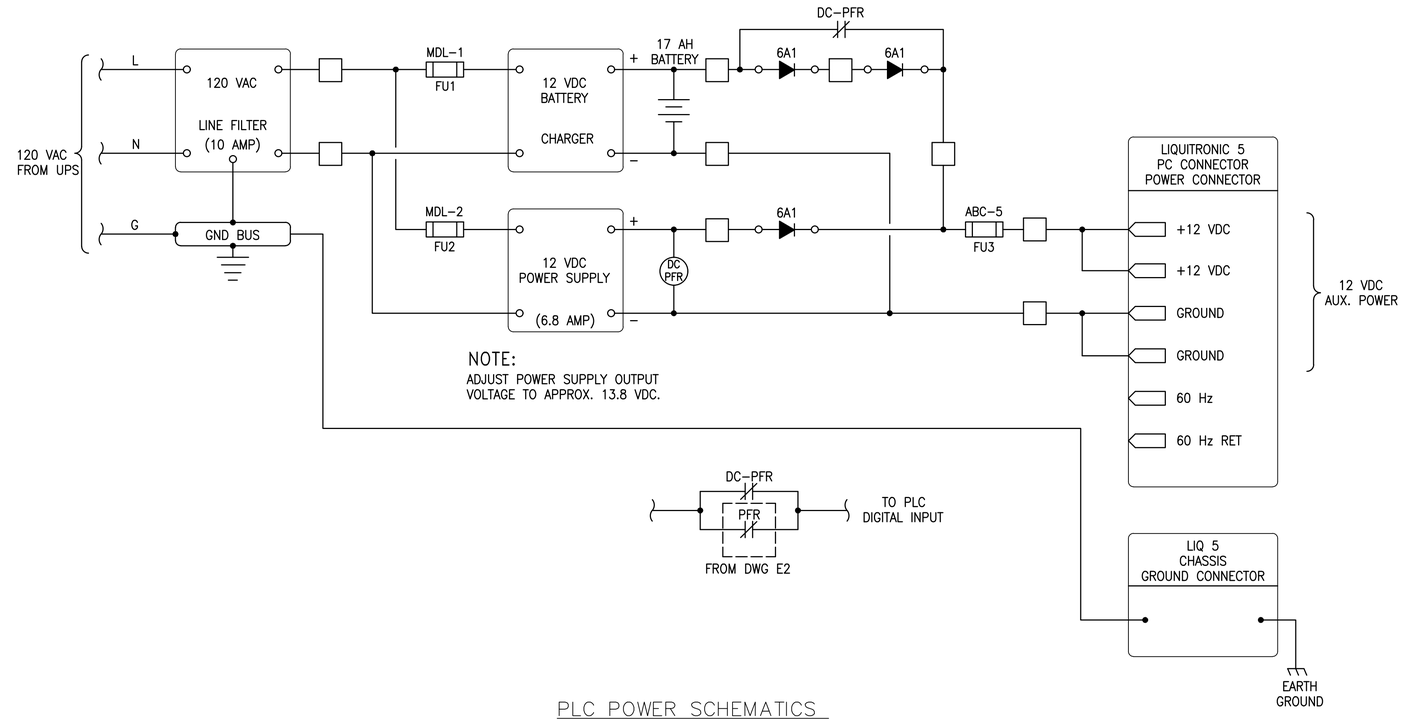

NOTE:
ADJUST POWER SUPPLY OUTPUT VOLTAGE TO APPROX. 13.8 VDC.

PLC POWER SCHEMATICS

NOTES:

1. FINAL SCHEMATICS TO BE SUBMITTED BY MCC SUPPLIER AND APPROVED BY ENGINEER.

REVISIONS			
REF.	DATE	BY	DESCRIPTION

JCC	9/9/22	DESIGNED BY / DATE
WCJ	9/9/22	DRAWN BY / DATE
JHR	9/9/22	CHECK BY / DATE

REGISTERED PROFESSIONAL ENGINEER JOHN C. CALLAN No. 14099 Exp. 6-30-23 ELECTRICAL STATE OF CALIFORNIA 9/9/22

WSC
805 AEROVISTA PLACE, SUITE 201 SAN LUIS OBISPO, CA 93401
PHONE: (805)457-8833 FAX: (805)888-2764

SAN LORENZO VALLEY WATER DISTRICT
BOULDER CREEK, CALIFORNIA

FALL CREEK FISH LADDER IMPROVEMENT PLAN

CONTROL PANEL SCHEMATICS

BAR IS ONE INCH ON ORIGINAL DRAWING, ADJUST SCALES FOR REDUCED PLOTS
0 1"

E7

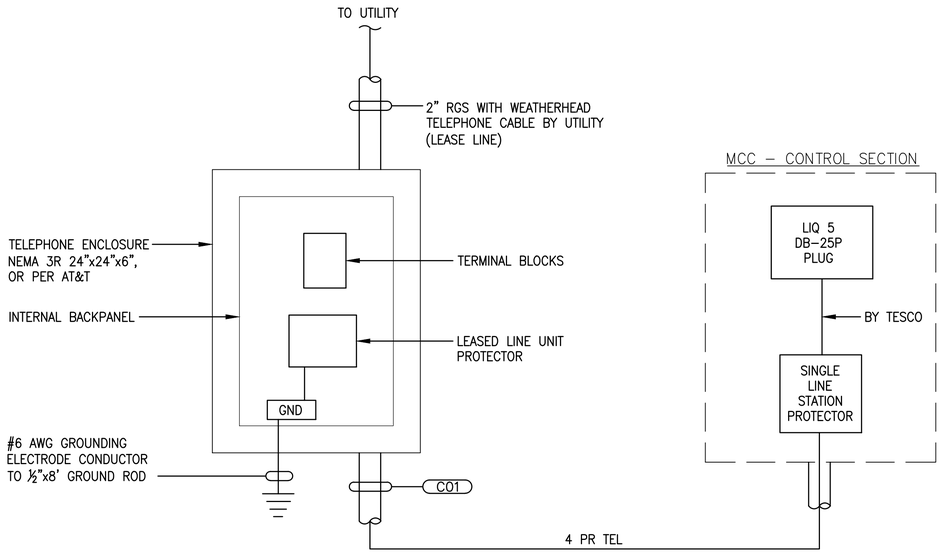

AT&T TELEPHONE LEASE LINE NETWORK DIAGRAM

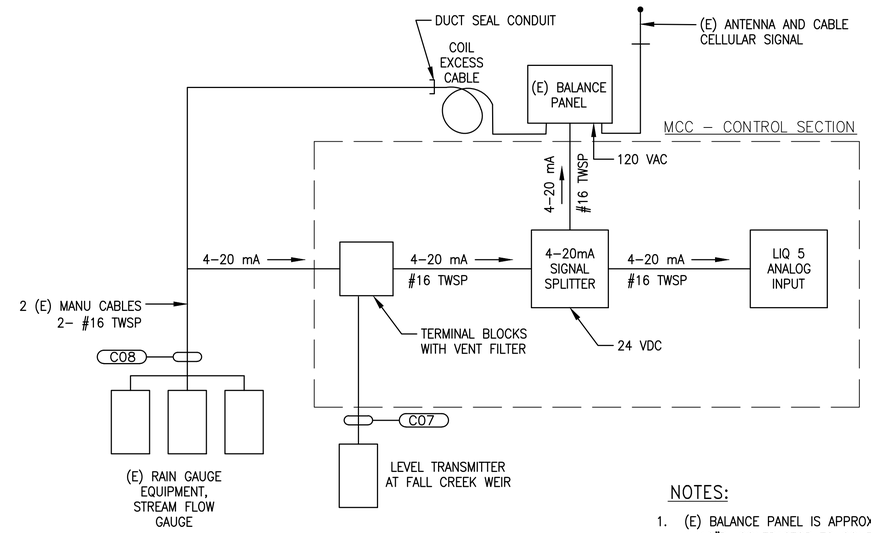

CELLULAR SIGNAL BALANCE PANEL NETWORK DIAGRAM

NOTES:

1. (E) BALANCE PANEL IS APPROXIMATELY 14"H X 12"W X 10"D, CONTRACTOR TO CONFIRM. POWER AND CREEK LEVEL SIGNAL CONDUITS TO ENTER BOTTOM OF PANEL ONLY.
2. MOUNT(E) BALANCE PANELTO SIDE OF MCC IN FIELD.

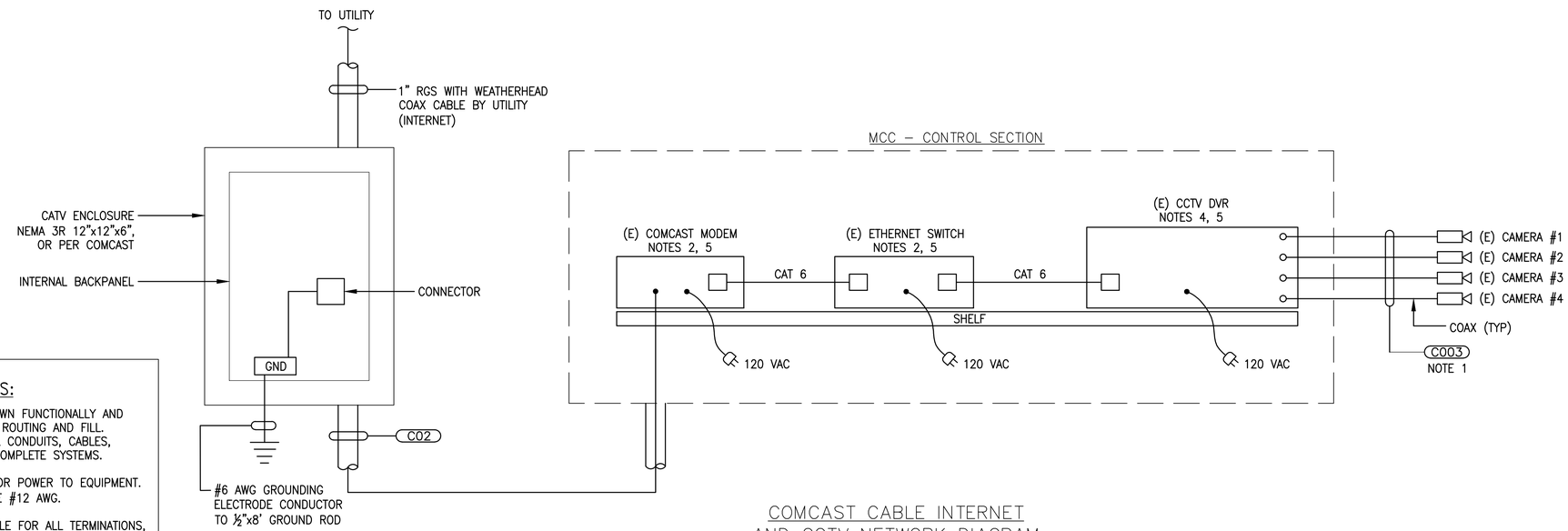

COMCAST CABLE INTERNET AND CCTV NETWORK DIAGRAM

NOTES:

1. LOW VOLTAGE POWER SUPPLY CABLES TO EACH CAMERA ARE NOT SHOWN, TO BE INCLUDED IN CONDUIT C003. PROVIDE PLUGMOLD TO CONNECT EACH CAMERA'S POWER SUPPLY TRANSFORMER. POWER SUPPLIES ARE EXISTING.
2. SONICWALL #APL24–08F.
3. APPROXIMATE DIMENSIONS 8"W X 6"D X 2"H.
4. APPROXIMATE DIMENSIONS 16"W X 14"D X 4"H.
5. RELOCATE (E) EQUIPMENT TO NEW MCC.

GENERAL SHEET NOTES:

1. NETWORK DIAGRAMS ARE SHOWN FUNCTIONALLY AND DOES NOT REFLECT CONDUIT ROUTING AND FILL. CONTRACTOR TO PROVIDE ALL CONDUITS, CABLES, FITTINGS, BOXES, ETC. FOR COMPLETE SYSTEMS.
2. CONTRACTOR RESPONSIBLE FOR POWER TO EQUIPMENT. MINIMUM WIRE SIZE SHALL BE #12 AWG.
3. MCC SUPPLIER IS RESPONSIBLE FOR ALL TERMINATIONS, CONNECTORS, PATCH CABLES, ENCLOSURES, ETC. NOT ALL REQUIRED COMPONENTS ARE SHOWN ON THESE NETWORK DIAGRAMS.

REVISIONS

REF.	DATE	BY	DESCRIPTION

JCC DESIGNED BY	9/9/22 DATE
WCJ DRAWN BY	9/9/22 DATE
JHR CHECK BY	9/9/22 DATE

REGISTERED PROFESSIONAL ENGINEER JOHN C. CALLAGHAN No. 14099 Exp. 6-30-23 ELECTRICAL STATE OF CALIFORNIA 9/9/22

WSC
805 AEROVISTA PLACE, SUITE 201 SAN LUIS OBISPO, CA 93401
PHONE: (805)457–8833 FAX: (805)888–2764

SAN LORENZO VALLEY WATER DISTRICT
BOULDER CREEK, CALIFORNIA

FALL CREEK FISH LADDER IMPROVEMENT PLAN

NETWORK DIAGRAMS

BAR IS ONE INCH ON ORIGINAL DRAWING, ADJUST SCALES FOR REDUCED PLOTS
0 1"

E8

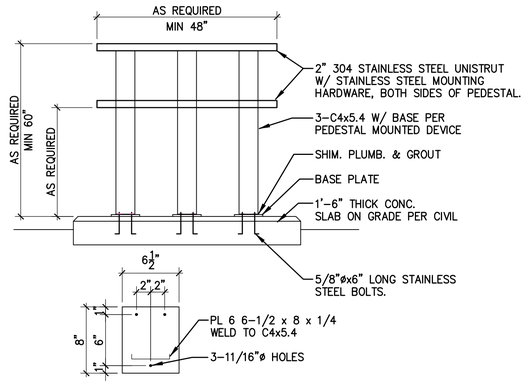

NOTE: HOT DIP GALVANIZE AFTER FABRICATION.

PD – LARGE PEDESTAL MOUNTING DETAIL
SCALE: NONE

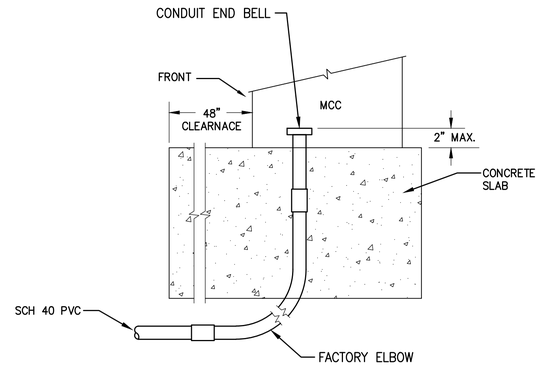

CR – EQUIPMENT STUB UP DETAIL
SCALE: NONE

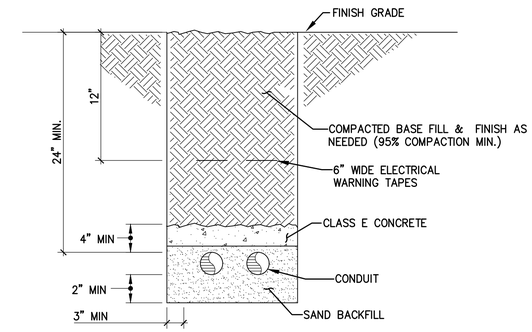

TD – CONCRETE CAP; (3) CONDUITS OR LESS TRENCH DETAIL
SCALE: NONE

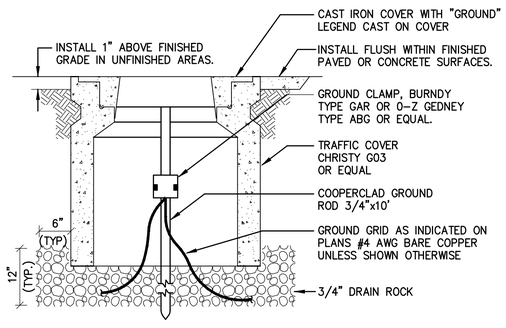

GW – GROUND WELL
SCALE: NONE

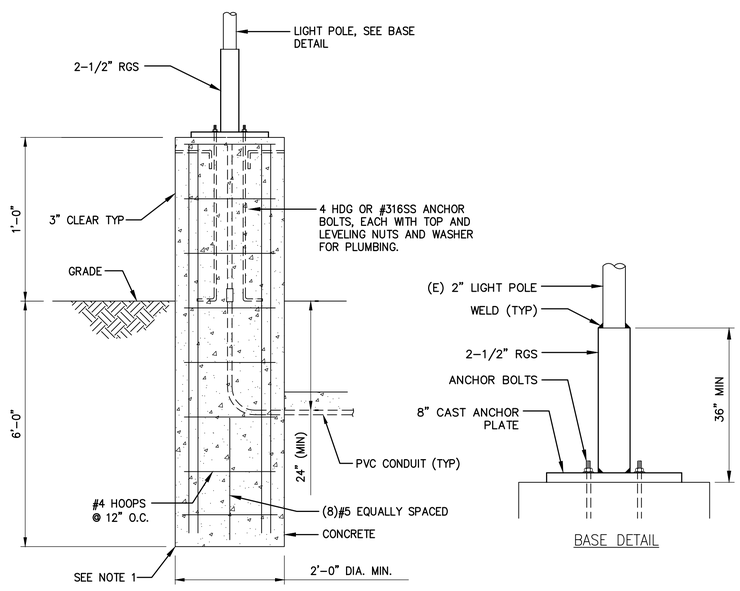

NOTES:
1. FOUNDATION TO BEAR AGAINST ORIGINAL SOIL OR 95% COMPACTED BACKFILL.

SL – LIGHT AND CAMERA POLE BASE DETAIL
SCALE: NONE

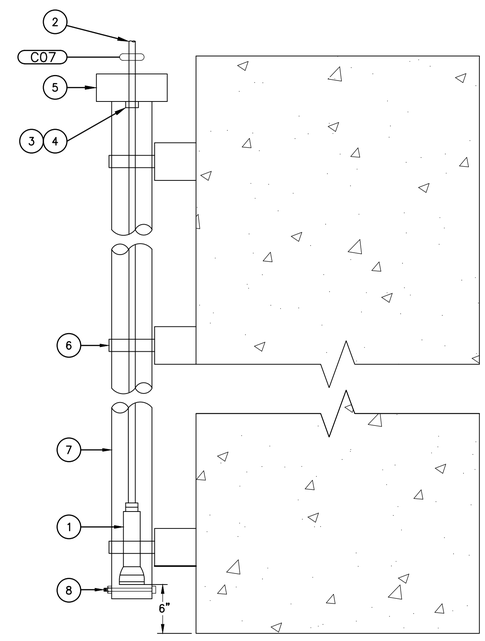

NOTES:
1. LEVEL TRANSMITTER. RANGE TO MATCH EXISTING TRANSMITTER RANGE.
2. CONTINUE TO MCC. PROVIDE LEVEL TRANSMITTER VENT FILTER IN CONTROL PANEL AT MCC. SPLICE WIRES ON TERMINAL BLOCKS AT MCC.
3. NON-METALLIC BUSHING.
4. 1" THREADED CONNECTOR, NEOPRENE BUSHING, AND GLAND NUT, "CROUSE HINDS" CGB SERIES OR APPROVED EQUAL. NEOPRENE BUSHING SHALL BE SIZED FOR THE DIAMETER OF THE CORD USED ON THE JOB.
5. J-BOX WITH LEVEL TRANSMITTER CABLE. NO SPLICES.
6. STAINLESS STEEL 1-5/8" X 1-5/8" UNISTRUT CHANNEL STAINLESS STEEL CHANNEL STRAPS, ANCHOR BOLTS, AND HARDWARE (TYP.) AT EVERY 4'.
7. 2" DIAMETER RGS.
8. INSTALL 1/4" 316 STAINLESS STEEL BOLT AND STAINLESS STEEL NYLON NUT AT 1" FROM THE BOTTOM OF PIPE.

LT – LEVEL TRANSMITTER, STILLING WELL DETAIL
SCALE: NONE

REVISIONS			
REF.	DATE	BY	DESCRIPTION

JCC	9/9/22
DESIGNED BY	DATE
WCJ	9/9/22
DRAWN BY	DATE
JHR	9/9/22
CHECK BY	DATE

REGISTERED PROFESSIONAL ENGINEER JOHN C. COLEMAN No. 14099 Exp. 6-30-23 ELECTRICAL STATE OF CALIFORNIA 9/9/22

WSC
805 AEROVISTA PLACE, SUITE 201 SAN LUIS OBISPO, CA 93401
PHONE: (805)457-8833 FAX: (805)888-2764

SAN LORENZO VALLEY WATER DISTRICT
BOULDER CREEK, CALIFORNIA

FALL CREEK FISH LADDER IMPROVEMENT PLAN

ELECTRICAL DETAILS-1

BAR IS ONE INCH ON ORIGINAL DRAWING, ADJUST SCALES FOR REDUCED PLOTS
0 1"

E9

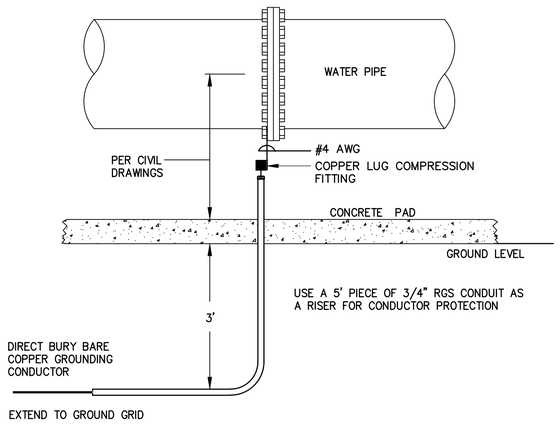

GP / – WATER PIPE GROUNDING DETAIL

SCALE: NONE

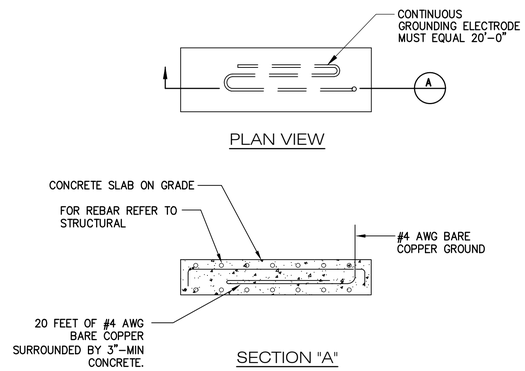

GU / – MCC SLAB ON GRADE UFER GROUNDING DETAIL

SCALE: NONE

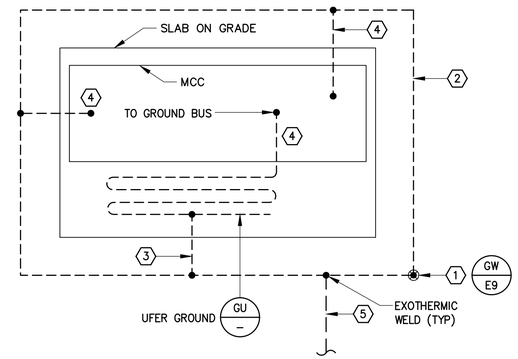

NOTES:

1. PROVIDE CAST IRON LID, INSCRIBED "GROUND" FOR ALL GROUND ROD BOXES.
2. ROUTE #2 AWG BARE COPPER GROUNDING WIRE 36" BELOW FINISHED GRADE FOR GROUNDING RING.
3. ROUTE #2 AWG BARE COPPER GROUNDING WIRE AND CONNECT TO UFER GROUND.
4. ROUTE #2 AWG BARE COPPER GROUNDING WIRE AND CONNECT TO MCC'S GROUND BUS, TYPICAL OF TWO PLACES.
5. ROUTE #4 AWG BARE COPPER GROUNDING WIRE AND CONNECT TO PUMP DISCHARGE HEADER NEAR FLOW METER, REFER TO DETAIL GP. ROUTE EXPOSED GROUND WIRE IN GALVANIZED RIGID STEEL CONDUIT.
6. GROUNDING PLAN IS NOT TO SCALE. REFER TO SITE PLAN FOR SCALED DRAWING AND EQUIPMENT LOCATIONS. PLAN DOES NOT INCLUDE IID GROUNDING REQUIREMENTS.

EQUIPMENT GROUNDING PLAN

SCALE: NONE (6)

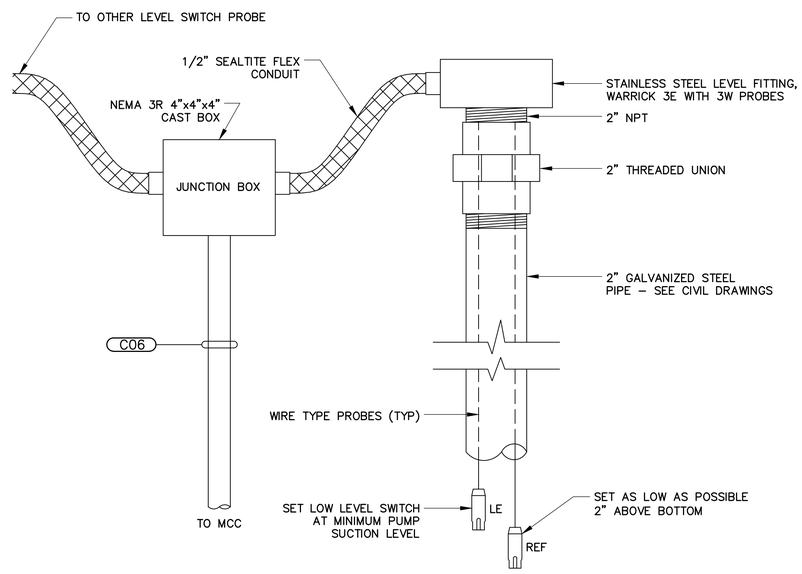

LS / – LEVEL SWITCH DETAIL

SCALE: NONE

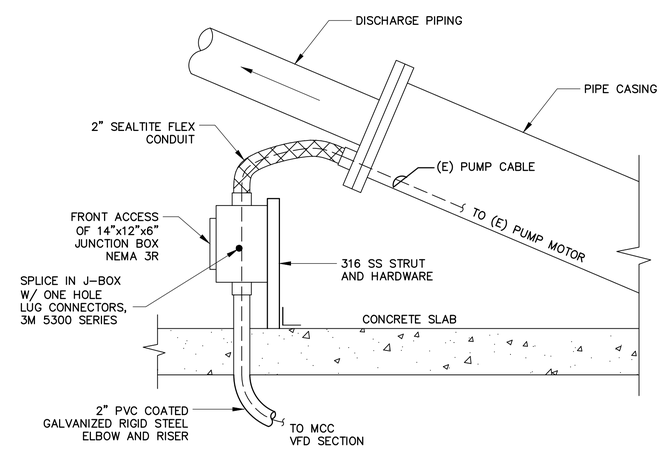

JB / – MOTOR JUNCTION BOX DETAIL

SCALE: NONE

REVISIONS			
REF.	DATE	BY	DESCRIPTION

JCC	9/9/22
DESIGNED BY	DATE
WCJ	9/9/22
DRAWN BY	DATE
JHR	9/9/22
CHECK BY	DATE

REGISTERED PROFESSIONAL ENGINEER JOHN C. CALDWELL No. 14099 Exp. 6-30-23 ELECTRICAL STATE OF CALIFORNIA 9/9/22

WSC
805 AEROVISTA PLACE, SUITE 201 SAN LUIS OBISPO, CA 93401
PHONE: (805)457-8833 FAX: (805)888-2764

SAN LORENZO VALLEY WATER DISTRICT
BOULDER CREEK, CALIFORNIA

FALL CREEK FISH LADDER IMPROVEMENT PLAN

ELECTRICAL DETAILS-2

BAR IS ONE INCH ON ORIGINAL DRAWING. ADJUST SCALES FOR REDUCED PLOTS
0 1"

E10

CONCRETE REINFORCEMENT DEVELOPMENT AND SPLICE LENGTHS (INCHES)																													
BAR LOCATION	CONCRETE		BAR SIZE																										
	TYPE	STRENGTH	#3			#4			#5			#6			#7			#8			#9					
			Ld	La	Lhd	Ld	La	Lhd	Ld	La	Lhd	Ld	La	Lhd	Ld	La	Lhd	Ld	La	Lhd	Ld	La	Lhd			
ABUTMENT/WALL VERT. BARS	NWC	2.5 KSI	12	16	6	12	16	6	18	24	11	22	29	13	35	46	15	45	59	17	57	75	19			
ABUTMENT/WALL HORIZ. BARS	NWC	2.5 KSI	12	13	6	13	17	6	24	32	11	29	38	13	41	54	15	47	62	17	53	69	19			

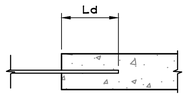

Ld = DEVELOPMENT LENGTH

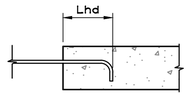

Lhd = HOOK DEVELOPMENT LENGTH

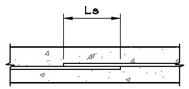

La = LAP SPLICE LENGTH

NOTES:

1. WHEN SPLICING BARS OF DIFFERENT SIZE, USE LAP SPLICE LENGTH OF LARGER BAR; U.N.O.
2. STAGGER SPLICES IN PARALLEL BARS.

REINFORCING SPLICE AND DEVELOPMENT LENGTHS

Hooks & Splices — 1 / S0

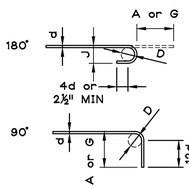

STD. HOOKS AND BENDS

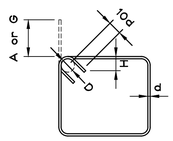

STIRRUPS AND TIES

END HOOKS				
BAR SIZE	D	180 DEGREE HOOKS		90 DEGREE HOOKS
		A or G	J	A or G
#3	$2\frac{1}{4}$"	5"	3"	6"
#4	3"	6"	4"	8"
#5	$3\frac{3}{4}$"	7"	5"	10"
#6	$4\frac{1}{2}$"	8"	6"	12"
#7	$5\frac{1}{4}$"	10"	7"	14"
#8	6"	11"	8"	16"
#9	8"	15"	$11\frac{1}{4}$"	19"

NOTE:

1. DO NOT FIELD BEND REINFORCEMENT PARTIALLY EMBEDDED IN CONCRETE

STIRRUPS AND TIES				
BAR SIZE	D	90 DEGREE HOOKS	135 DEGREE HOOKS	
		A or G	A or G	H APPROX
#3	$1\frac{1}{2}$"	4"	4"	$2\frac{1}{2}$"
#4	2"	$4\frac{1}{2}$"	$4\frac{1}{2}$"	3"
#5	$2\frac{1}{2}$"	6"	$5\frac{1}{2}$"	$3\frac{3}{4}$"
SEISMIC TIES				
BAR SIZE	D	135 DEGREE HOOKS		
		A or G	H APPROX	
#3	$1\frac{1}{2}$"	5"	$3\frac{1}{2}$"	
#4	2"	$6\frac{1}{2}$"	$4\frac{1}{2}$"	
#5	$2\frac{1}{2}$"	8"	$5\frac{1}{2}$"	

HOOKS AND BENDS

Hooks & Splices — 2 / S0

ABBREVIATIONS

AB	Anchor Bolt	(E)	Existing	PL	Plate or Property Line
ABV	Above	EA	Each	PLY	Plywood
ACI	American Concrete Institute	EN	Edge Nailing	PSF	Pounds per Square Foot
		ENGR	Engineer	PSI	Pounds per Square Inch
ALT	Alternate	EXT	Exterior	PTDF	Preservative Treated Douglas Fir
APA	American Plywood Association	FLR	Floor	RDWD	Redwood
		FND	Foundation	REINF	Reinforcement
ARCH	Architect	FOC	Face of Concrete	REQD	Required
ATR	All Thread Rod	FOS	Face of Stud	RF	Roof
BD	Board	FRMG	Framing	RM	Room
BLK(G)	Blocking)	FT	Foot or Feet	RTW	Retaining Wall
BLW	Below	FTG	Footing	SAD	See Architectural Drawings
BM	Beam	GALV	Galvanized	SB	Solid Blocking
BN	Boundary Nailing	GL	Glued Laminated	SF	Square Foot
BP	Base Plate	GYP	Gypsum	SIM	Similar
BRG	Bearing	HD	Holdown	SPEC	Specifications
CL	Center Line	HDR	Header	SQ	Square
CLG	Ceiling	HORIZ	Horizontal	STD	Standard
CLR	Clear, Clearance	HT	Height	STL	Steel
COL	Column	INT	Interior	SKYLT	Skylight
CONC	Concrete	JST(S)	Joist(s)	T&B	Top and Bottom
CONN	Connection	MB	Machine Bolt	T&G	Tongue and Groove
CONT	Continuous	MI	Malleable Iron	TOC	Top of Concrete
CNTR	Center	MIN	Minimum	TOW	Top of Wall
DBL	Double	(N)	New	TYP	Typical
DF	Douglas Fir	OC	On Center	UBC	Uniform Building Code
DIA	Diameter	OH	Opposite Hand	UNO	Unless Noted Otherwise
DTL	Detail	OPNG	Opening	ø	Diameter
DWG	Drawing	PAF	Powder Actuated Fastener		

STRUCTURAL NOTES AND SPECIFICATIONS

A. GENERAL

1. THE CONTRACTOR SHALL EXAMINE CAREFULLY THE SITE OF WORK CONTEMPLATED, THE PLANS, AND SPECIFICATIONS; THEREFORE, THE SUBMISSION OF A BID SHALL BE CONCLUSIVE EVIDENCE THAT THE CONTRACTOR HAS INVESTIGATED AND IS SATISFIED AS TO THE CONDITIONS TO BE ENCOUNTERED, THE CHARACTER, QUALITY, AND SCOPE OF WORK TO BE PERFORMED, THE QUANTITIES OF MATERIALS TO BE FURNISHED, AND AS TO THE REQUIREMENTS OF THE PLANS AND THESE SPECIFICATIONS.
2. ALL CONSTRUCTION AND MATERIALS SHALL BE AS SPECIFIED AND AS REQUIRED BY THE LATEST EDITION OF THE CALIFORNIA BUILDING CODE, THE CALIFORNIA BUILDING CODE STANDARDS, AND LOCALLY ENFORCED CODES AND AUTHORITIES. ALL ARTICLES, MATERIALS, AND EQUIPMENT SHALL BE INSTALLED, APPLIED, AND CONNECTED AS DIRECTED BY THE MANUFACTURER'S LATEST WRITTEN SPECIFICATIONS EXCEPT WHERE OTHERWISE NOTED. MATERIAL NOTES ON THE DRAWINGS SHALL TAKE PRECEDENCE OVER THESE SPECIFICATIONS.
3. IT SHALL BE THE CONTRACTOR'S SOLE RESPONSIBILITY TO DESIGN AND PROVIDE ADEQUATE SHORING, BRACING, FORMWORK, ETC., AS REQUIRED FOR THE PROTECTION OF LIFE AND PROPERTY DURING CONSTRUCTION.
4. THE CONTRACTOR SHALL EXAMINE AND CHECK ALL EXISTING CONDITIONS, DIMENSIONS, LEVELS, AND MATERIALS AND NOTIFY THE OWNER OR ENGINEER OF ANY DISCREPANCIES BEFORE PROCEEDING WITH THE WORK. SHOULD A DISCREPANCY APPEAR IN THE SPECIFICATIONS OR DRAWINGS, OR IN THE WORK DONE BY OTHERS FROM THE CONTRACT DOCUMENTS, THAT AFFECT ANY WORK, THE PROJECT ENGINEER SHALL BE NOTIFIED AT ONCE FOR INSTRUCTIONS ON HOW TO PROCEED. IF THE CONTRACTOR PROCEEDS WITH THE WORK AFFECTED, WITHOUT INSTRUCTIONS FROM THE PROJECT ENGINEER, THE CONTRACTOR SHALL MAKE GOOD ANY RESULTING DAMAGE OR DEFECT TO THE SATISFACTION OF THE PROJECT ENGINEER. SHOULD A CONFLICT OCCUR IN, OR BETWEEN DRAWINGS AND SPECIFICATIONS, OR WHERE DETAIL REFERENCES ON CONTRACT DRAWINGS HAVE BEEN OMITTED, THE CONTRACTOR IS DEEMED TO HAVE ESTIMATED THE MOST EXPENSIVE MATERIALS AND CONSTRUCTION METHOD INVOLVED, UNLESS A WRITTEN DECISION OF THE PROJECT ENGINEER HAS BEEN OBTAINED WHICH DESCRIBES AN ALTERNATE METHOD AND/OR MATERIALS.
5. THE CONTRACTOR SHALL SUPPLY ALL LABOR, MATERIALS, EQUIPMENT AND SERVICES OF EVERY KIND, INCLUDING WATER AND POWER, NECESSARY FOR THE PROPER EXECUTION OF THE WORK SHOWN OR INDICATED ON THESE DRAWINGS. ALL MATERIAL SHALL BE NEW AND MATERIALS AND WORKMANSHIP SHALL BE IN GOOD QUALITY. ALL WORKMEN AND SUBCONTRACTORS SHALL BE SKILLED IN THEIR TRADE.

B. EARTHWORK

1. FOOTINGS SHALL BE EMBEDDED AT LEAST 6 INCHES INTO COMPETENT NATIVE BEDROCK.
2. CONTRACTOR SHALL CAREFULLY EXCAVATE ALL MATERIALS NECESSARY OF WHATEVER NATURE, FOR CONSTRUCTION OF THE WORK. ANY MATERIAL OF AN UNSUITABLE OR DELETERIOUS NATURE DISCOVERED BELOW THE BOTTOMS OF THE FOUNDATIONS SHALL BE BROUGHT TO THE ATTENTION OF THE PROJECT ENGINEER BEFORE PROCEEDING WITH THE WORK.
3. BACKFILL OR WATER SHALL NOT BE PLACED BEHIND WALLS UNTIL 7 DAYS AFTER PLACING CONCRETE OR UNTIL THE CONCRETE HAS DEVELOPED A COMPRESSIVE STRENGTH OF NOT LESS THAN 2,500 PSI, WHICHEVER OCCURS FIRST.

C. CONCRETE

1. POURED IN PLACE CONCRETE WORK SHALL BE CONSTRUCTED OF NORMAL WEIGHT, PORTLAND CEMENT CONCRETE, HAVING A MINIMUM 28-DAY COMPRESSIVE STRENGTH OF 4500 PSI. WITH A MAX. WATER TO CEMENT RATIO OF 0.5. ALL PORTLAND CEMENT CONCRETE SHALL CONFORM TO THE REQUIREMENTS OF ACI 318, "BUILDING CODE REQUIREMENTS FOR REINFORCED CONCRETE", LATEST EDITION. MAXIMUM CONCRETE SLUMP SHALL BE 4 INCHES. THE USE OF ANY ADMIXTURE IN THE CONCRETE MUST BE APPROVED BY THE ENGINEER.
2. ALL NEWLY PLACED CONCRETE SHALL BE CURED IN ACCORDANCE WITH THE PROVISIONS IN ACI 308, "STANDARD PRACTICE FOR CURING CONCRETE," LATEST EDITION. METHOD OF CURING SHALL BE AT THE OPTION OF THE CONTRACTOR WITH APPROVAL OF THE OWNER.
3. ALL METAL ANCHORAGE DEVICES, ANCHOR BOLTS, ETC. SHALL BE SECURED IN PLACE AND INSPECTED BY ENGINEER PRIOR TO PLACING CONCRETE.
4. ALL WORK DONE UNDER THIS SECTION SHALL CONFORM WITH THE APPLICABLE PORTIONS OF ACI 318, LATEST EDITION.

D. REINFORCEMENT

1. ALL REINFORCING STEEL SHALL BE GRADE 60 CONFORMING TO THE REQUIREMENTS OF ASTM A615. STAGGERED REINFORCING BAR CONTACT SPLICES SHALL LAP PER DETAIL 1/S0. SUPPORT HORIZONTAL STEEL AT BOTTOM ON MORTAR BLOCKS. MINIMUM CLEARANCE SHALL BE 3 INCHES FOR SURFACES POURED AGAINST EARTH AND 1.5 INCHES ELSEWHERE U.N.O.
2. ALL REINFORCING SHALL BE SECURED IN PLACE AND INSPECTED BY THE PROJECT ENGINEER PRIOR TO PLACING ANY CONCRETE OR GROUT.
3. ALL WORK DONE UNDER THIS SECTION SHALL CONFORM WITH THE APPLICABLE PORTIONS OF ACI 318, LATEST EDITION, PARTICULARLY CHAPTER 7, "DETAILS OF REINFORCEMENT".

E. EPOXY

1. EPOXY SHALL BE HILTI HIT-HY 200, UNLESS NOTED OTHERWISE.
2. EPOXY AND ANCHORS SHALL BE INSTALLED PER ALL OF MANUFACTURER'S INSTRUCTIONS.
3. THE BASE MATERIAL MUST BE AT LEAST 40°F AT THE TIME OF APPLICATION.
4. HOLE DIAMETER, ANCHOR EMBEDMENT, SPACING, AND EDGE DISTANCES MUST COMPLY WITH THE ALLOWABLE LOAD TABLES IN THE EPOXY MANUFACTURER'S LITERATURE, U.N.O.
5. ALL DUST AND DEBRIS SHALL BE REMOVED FROM THE HOLE USING OIL-FREE COMPRESSED AIR AND A NYLON BRUSH.
6. EPOXY NOZZLE SHALL BE CLEAN AND EPOXY SHALL NOT BE ALLOWED TO CURE IN THE NOZZLE FOR MORE THAN 5 MINUTES.
7. AN INITIAL AMOUNT OF EPOXY SHALL BE DISPENSED AWAY FROM THE HOLE, CHECKED FOR UNIFORM MIXING, AND DISCARDED PRIOR TO DISPENSING EPOXY INTO HOLE.
8. HOLE SHALL BE FILLED HALFWAY, STARTING FROM THE BOTTOM, AND WITHDRAWING THE NOZZLE AS THE HOLE IS FILLED, TO AVOID AIR POCKETS.
9. THREADED ROD ANCHORS AND INSERTS SHALL BE STAINLESS STEEL, UNLESS NOTED OTHERWISE.
10. THREADED RODS OR DOWELS SHALL BE CLEAN AND FREE OR RUST, SCALE AND OIL.
11. RODS OR DOWELS SHALL BE PUSHED TO THE BOTTOM OF THE HOLE WITH A SLOW, TWISTING MOTION.
12. EPOXY MUST BE LEVEL WITH HOLE SURFACE AFTER INSERTION OF ANCHOR OR DOWEL.
13. ANCHORS MUST NOT BE LOADED OR DISTURBED UNTIL THE CURE TIME HAS PASSED.

SECTION "F' NOT USED

G. STAIRS (HOT DIP GALVANIZED STRUCTURAL STEEL)

1. STAIRS SHALL BE IN COMPLIANCE WITH OSHA REGULATIONS FOR FIXED INDUSTRIAL STAIRS (1910.24).
2. STEEL MATERIALS SHALL COMPLY WITH THE FOLLOWING SPECIFICATIONS UNLESS OTHERWISE SPECIFIED.
   a. CHANNELS AND MISCELLANEOUS PLATES: A.S.T.M. A36 Fy=36 KSI
   b. HOLLOW STRUCTURAL SECTIONS: A.S.T.M. A500 GRADE B Fy=46 KSI
2. STRUCTURAL STEEL SHALL BE FABRICATED AND ERECTED IN ACCORDANCE WITH A.I.S.C. "SPECIFICATIONS FOR THE DESIGN, FABRICATION AND ERECTION OF STRUCTURAL STEEL FOR BUILDINGS", LATEST REVISION.
3. ALL WELDING SHALL BE DONE WITH E70XX ELECTRODES.
4. ALL BOLTS AND THREADED RODS SHALL BE A307 UNLESS NOTED OTHERWISE.
5. ALL STRUCTURAL STEEL AND HARDWARE FOR STAIRS SHALL BE HOT DIP GALVANIZED PER ASTM A123 OR ASTM A153.
6. CONTRACTOR SHALL PROVIDE SHOP DRAWINGS OF STRUCTURAL STEEL FOR THE STAIRS TO THE STRUCTURAL ENGINEER FOR FAVORABLE REVIEW PRIOR TO CONSTRUCTION.

H. PRE-MANUFACTURED STEEL STAIR TREADS

1. STEEL STAIR TREAD TYPE SHALL BE STANDARD CARBON STEEL WELDED BAR GRATING.
2. STAIR TREAD STRENGTH SHALL BE IN COMPLIANCE WITH OSHA REGULATIONS FOR FIXED INDUSTRIAL STAIRS (1910.24).
3. TOP TRAFFIC SURFACE SHALL BE SERRATED SLIP RESISTANT.
4. TREAD END PLATES SHALL BE PRE-DRILLED FOR DIRECT ATTACHMENT TO THE STAIR STRINGERS.
5. STAIR NOSING SHALL BE CHECKERED PLATE OR APPROVED EQUIVALENT.
6. STAIR TREAD FINISH SHALL BE HOT DIP GALVANIZED AFTER FABRICATING IN ACCORDANCE WITH ASTM A123.
7. STAIRS TREADS SHALL BE BY "AMICO" OR APPROVED EQUIVALENT.
8. CONTRACTOR SHALL SUBMIT PRODUCT ALONG WITH MANUFACTURER'S LITERATURE INCLUDING LOAD AND DEFLECTION TABLES FOR APPROVAL PRIOR TO ORDERING.
9. STAIR TREADS SHALL BE INSTALLED ACCORDING TO PLAN AND PER THE MANUFACTURER'S INSTRUCTIONS.

I. STEEL PIPE RAILINGS

1. STAIR RAILINGS SHALL BE IN COMPLIANCE WITH OSHA REGULATIONS FOR FIXED INDUSTRIAL STAIRS (1910.23).
2. STAIR RAILINGS SHALL BE FABRICATED OF GALVANIZED PIPE MATERIAL MEETING THE REQUIREMENTS OF ASTM A53.
3. RAILING SYSTEM SHALL BE PREASSEMBLED IN THE SHOP TO THE GREATEST EXTENT POSSIBLE TO MINIMIZE FIELD SPLICING AND ASSEMBLY.
4. RAILING SYSTEM SHALL BE FABRICATED BY WELDING. USE MATERIALS AND METHODS THAT DEVELOP THE STRENGTH AND CORROSION RESISTANCE OF THE BASE METALS. AT TEE AND CROSS INTERSECTIONS, NOTCH ENDS OF INTERSECTING MEMBERS TO FIT CONTOUR OF PIPE TO WHICH END IS JOINED AND WELD ALL AROUND. AT EXPOSED CONNECTIONS, FINISH EXPOSED WELDS AND SURFACES SMOOTH AND BLENDED SO NO ROUGHNESS SHOWS AFTER FINISHING AND SO CONTOURS OF WELDED SURFACES MATCH ADJACENT SURFACES.
5. GRIND SMOOTH WELDED JOINTS AND BUFF WELDS TO SAME APPEARANCE AS REMAINDER OF RAILING. REPAIR GALVANIZING AND CUT PIPE ENDS AS REQUIRED.
6. TOUCH UP ANY FIELD WELDS TO MATCH PRE-FINISHED MATERIAL.
7. CONTRACTOR SHALL PROVIDE SHOP DRAWINGS OF STEEL RAILINGS FOR THE STAIRS TO THE STRUCTURAL ENGINEER FOR FAVORABLE REVIEW PRIOR TO CONSTRUCTION.

J. SPECIAL INSPECTION

1. SPECIAL INSPECTOR: SHALL BE EMPLOYED BY THE OWNER TO PROVIDE INSPECTIONS DURING CONSTRUCTION ON THE TYPES OF WORK LISTED BELOW. THE SPECIAL INSPECTOR SHALL BE A QUALIFIED PERSON WHO SHALL DEMONSTRATE COMPETENCE FOR THE INSPECTION OF THE PARTICULAR TYPE OF CONSTRUCTION OR OPERATION REQUIRING SPECIAL INSPECTION.
2. REPORTS: SHALL BE PREPARED BY THE INSPECTOR AND SIGNED BY A CALIFORNIA CIVIL ENGINEER. SUBMITTED TO THE BUILDING OFFICIAL AND TO THE ENGINEER RECORD. ALL DISCREPANCIES SHALL BE BROUGHT TO THE IMMEDIATE ATTENTION OF THE CONTRACTOR FOR CORRECTION; THEN, IF NOT CORRECTED, TO THE BUILDING OFFICIAL AND THE ENGINEER OF RECORD.
3. CERTIFICATION: INSPECTOR MUST BE CERTIFIED BY THE BUILDING OFFICIAL TO PERFORM THE TYPES OF INSPECTIONS SPECIFIED.
4. SPECIAL INSPECTION IS REQUIRED OF THE ITEMS LISTED BELOW:

ITEM	INSPECTION TASK	PERIODIC OR CONTINUOUS
SHOP AND FIELD STRUCTURAL WELDING	COMPLETE & PARTIAL PENETRATION GROOVE WELDS, MULTIPASS FILLET WELDS, AND SINGLE PASS FILLET WELDS GREATER THAN ⅜"	CONTINUOUS
	SINGLE PASS FILLET WELDS LESS THAN AND EQUAL TO ⅜"	PERIODIC
EPOXY ANCHOR INSTALLATION (BY STREETER GROUP, INC.)	IN ACCORDANCE WITH EVALUATION REPORT ESR-3187 SECTION 4.3	PERIODIC
TIEBACK ANCHORS	VERIFICATION OF TIEBACK INSTALLER, PRODUCT MANUFACTURER, TIEBACK ASSEMBLY, INCLINATION AND POSITION, INSTALLATION DEPTH, TESTING, AND COMPLIANCE	PERIODIC

5. INSPECTION OF FABRICATORS: (CBC 1704.2) THE FABRICATION OF ALL STEEL STRUCTURAL LOAD-BEARING MEMBERS AND ASSEMBLIES MAY BE PERFORMED ON THE PREMISES OF A FABRICATOR'S SHOP. SPECIAL INSPECTION OF THESE FABRICATED ITEMS SHALL BE REQUIRED AS STATED BELOW.
   a. THE SPECIAL INSPECTOR SHALL VERIFY THAT THE FABRICATOR MAINTAINS DETAILED FABRICATION AND QUALITY CONTROL PROCEDURES THAT PROVIDE A BASIS FOR INSPECTION CONTROL OF THE WORKMANSHIP AND THE FABRICATOR'S ABILITY TO CONFORM TO APPROVED CONSTRUCTION DOCUMENTS AND REFERENCED STANDARDS. THE SPECIAL INSPECTOR SHALL REVIEW THE PROCEDURES FOR COMPLETENESS AND ADEQUACY RELATIVE TO THE CODE REQUIREMENTS FOR THE FABRICATOR'S SCOPE OF WORK.
   b. SPECIAL INSPECTIONS DURING FABRICATION ARE NOT REQUIRED WHERE WORK IS DONE ON THE PREMISES OF A FABRICATOR APPROVED TO PERFORM SUCH WORK WITHOUT SPECIAL INSPECTION. APPROVAL SHALL BE BASED ON REVIEW OF THE FABRICATOR'S WRITTEN PROCEDURAL AND QUALITY CONTROL MANUALS THAT PROVIDE A BASIS FOR CONTROL OF MATERIALS AND WORKMANSHIP, WITH PERIODIC AUDITING OF FABRICATION AND QUALITY CONTROL PRACTICES BY AN APPROVED AGENCY OR THE BUILDING OFFICIAL. AT COMPLETION OF FABRICATION, THE APPROVED FABRICATOR SHALL SUBMIT A CERTIFICATE OF COMPLIANCE TO THE BUILDING OFFICIAL STATING THAT THE WORK WAS PERFORMED IN ACCORDANCE WITH THE APPROVED CONSTRUCTION DOCUMENTS.

K. STRUCTURAL OBSERVATION

1. STRUCTURAL ENGINEER SHALL PERFORM STRUCTURAL OBSERVATION OF THE PRIMARY STRUCTURAL FRAMING AT THE FOLLOWING STAGES OF WORK:
   a. FOUNDATION: PRIOR TO POURING CONCRETE BUT AFTER REINFORCING STEEL AND STEEL EMBEDMENTS ARE IN PLACE.
2. CONTRACTOR SHALL CONTACT ENGINEER 48 HOURS MINIMUM PRIOR TO DESIRED TIME OF OBSERVATION.

L. SHOTCRETE

1. SHOTCRETE SHALL HAVE A MINIMUM 28-DAY COMPRESSIVE STRENGTH OF 4500 PSI. WITH A MAX. WATER TO CEMENT RATIO OF 0.45. SUBMIT DESIGN MIX FOR SHOTCRETE TO ENGINEER FOR FAVORABLE REVIEW.
2. WHERE REQUIRED ALL PNEUMATIC CONCRETE PLACEMENT SHALL BE INSPECTED BY A SPECIAL INSPECTOR IN CONFORMANCE WITH CBC SECTION 1701, WHO SHALL SUBMIT A STATEMENT INDICATING COMPLIANCE WITH THE PLANS AND SPECIFICATIONS.
3. PROTECT FRESHLY PLACED SHOTCRETE FROM PREMATURE DRYING AND EXCESSIVE COLD OR HOT TEMPERATURES. START INITIAL CURING AS SOON AS FREE WATER HAS DISAPPEARED FROM SHOTCRETE SURFACE AFTER PLACING AND FINISHING. CURE EXPOSED SURFACES BY EITHER MOISTURE CURING FOR A MINIMUM OF SEVEN DAYS OR BY CURING COMPOUND. SUBMIT METHOD OF CURING AND PRODUCT DATA TO ENGINEER FOR FAVORABLE REVIEW PRIOR TO WORK.
4. NOZZLE OPERATOR SHOULD BE CERTIFIED AND HAVE COMPLETED AT LEAST ONE SIMILAR APPLICATION AS A NOZZLE OPERATOR ON A SIMILAR PROJECT. THE NOZZLE OPERATOR SHOULD ALSO BE ABLE TO DEMONSTRATE, BY TEST, AN ABILITY TO SATISFACTORILY PERFORM THE REQUIRED DUTIES AND TO APPLY SHOTCRETE AS REQUIRED BY SPECIFICATIONS.
5. SHOTCRETE MAY BE APPLIED IN LAYERS OR A SINGLE THICHNESS, DEPENDING ON THE POSITION OF THE WORK. SHOTCRETE SHALL BE APPLIED IN THICKNESSES TO PREVENT SAGGING OR DROPOUTS. WHENEVER POSSIBLE, SECTIONS SHOULD BE GUNNED TO THEIR FULL DESIGN THICKNESS IN ONE LAYER, THEREBY REDUCING THE POSSIBILITY OF COLD JOINTS AND LAMINATIONS. THE SHOTCRETE SHOULD EMERGE FROM THE NOZZLE IN A STEADY, UNINTERRUPTED FLOW.
6. CONTRACTOR SHALL SHALL PROTECT ADJACENT AREAS FROM REBOUND, OVERSPRAY, AND DUST RESULTING FROM THE SHOTCRETE APPLICATION. REMOVE AND DISPOSE OF REBOUND AND OVERSPRAY MATERIALS FORM FINAL SHOTCRETE SURFACES AND AREAS NOT INTENDED FOR SHOTCRETE PLACEMENT.
7. MIXING EQUIPMENT SHALL BE CAPABLE OF THOROUGHLY MIXING SHOTCRETE MATERIALS IN SUFFICIENT QUANTITIES TO MAINTAIN CONTINUOUS PLACEMENT.
8. BEFORE APPLYING SHOTCRETE OVER CONCRETE, REMOVE UNSOUND OR LOOSE MATERIALS AND CONTAMINANTS THAT MAY INHIBIT SHOTCRETE BONDING. DAMPEN SURFACES BEFORE SHOTCRETING.
9. BEFORE APPLYING SHOTCRETE OVER EARTH, COMPACT AND TRIM TO LINE AND GRADE BEFORE PLACING SHOTCRETE. DAMPEN SURFACES BEFORE SHOTCRETING.
10. SHOTCRETE PLACEMENT SHALL BE CONTINUOUS BETWEEN WEIRS WITH NO CONSTRUCTION JOINTS UNLESS PRE-APPROVED BY ENGINEER.
11. APPLY SHOTCRETE PER ACI 506.2.
12. FINISH SHOTCRETE ACCORDING TO DESCRIPTIONS IN ACI 506R. SHOTCRETE SHALL HAVE A BROOM FINISH.

M. GROUTED SOIL ANCHORS

1. GROUTED TIEBACK SOIL ANCHORS SHALL BE INSTALLED PER THESE PLANS.
2. GROUTED TIEBACK ANCHOR SYSTEMS SHALL BE BY WILLIAMS FORM ENGINEERING CORPORATION OR APPROVED EQUIVALENT.
3. TIEBACK ASSEMBLIES SHALL BE SELECTED TO ACHIEVE THE LOADS SPECIFIED ON THE PLANS.
4. TIEBACK ASSEMBLIES SHALL BE CORROSION PROTECTED ACCORDING TO PTI (POST TENSIONING INSTITUTE) CLASS I FOR A 50 YEAR MINIMUM SERVICE LIFE.
5. TIEBACK ASSEMBLIES SHALL BE OBSERVED BY THE PROJECT ENGINEER PRIOR TO PLACEMENT INTO THE DRILLED TIEBACK HOLES TO CONFIRM CORROSION PROTECTION MEASURES AND TO MEASURE THEIR LENGTH.
6. ACCEPTABLE DRILLING METHODS INCLUDE BUT ARE NOT LIMITED TO DRILL/DRIVE, ROTARY, OR AUGER. THE DRILLING METHOD SHALL BE DETERMINED BY THE TIEBACK CONTRACTOR.
7. TIEBACKS MUST BE TESTED PER THE POST TENSIONING INSTITUTE RECOMMENDATIONS FOR PRESTRESSED ROCK AND SOIL ANCHORS.
8. TIEBACK ANCHORS SHALL BE PULL TESTED IN ACCORDANCE WITH THE POST TENSIONING INSTITUTE RECOMMENDATIONS FOR PRESTRESSED ROCK AND SOIL ANCHORS.
   a. PULL TEST 50% OF ANCHORS BY PULLING FOR 10 MINUTES AT 133% OF THE DESIGN LOAD. LOCK OFF ALL TIEBACK ANCHORS AT 50% OF THE DESIGN LOAD.
   b. TESTING SHALL BE OBSERVED BY PROJECT ENGINEER.
9. PRIOR TO STARTING THE WORK, THE CONTRACTOR SHALL SUBMIT COMPLETE DETAILS OF THE PROPOSED ANCHOR SYSTEM. THE ANCHOR SYSTEM MANUFACTURER SHALL FURNISH SHOP DRAWINGS AND RELATED DATA SUCH AS CATALOG CUTS, PRODUCT DETAILS, BROCHURES AND CEMENT GROUT DESIGN. MILL CERTIFICATIONS FOR THE PRESTRESSING BAR AND THE CALIBRATIONS FOR THE TESTING EQUIPMENT SHALL BE SUBMITTED PRIOR TO THE ANCHOR INSTALLATION.

REVISIONS	BY
1	
2	
3	
4	
5	
6	

Streeter Group, Inc.
Architecture&Structural Engineering
2571 Main Street Suite C Soquel CA 95073
Phone: (831) 477-1781 www.streetergroup.com

FALL CREEK FISH LADDER IMPROVEMENT PROJECT

REGISTERED PROFESSIONAL ENGINEER SCOTT A. STREETER No. S3724 Exp. 6/23 STRUCTURAL STATE OF CALIFORNIA

STRUCTURAL NOTES, SPECIFICATIONS AND TYPICAL DETAILS

DATE:	9-9-22
SCALE:	AS NOTED
DRAWN BY:	
CHECK BY:	
CAD FILE:	
JOB NO:	20002
SHEET	S0
OF 33 SHEETS	

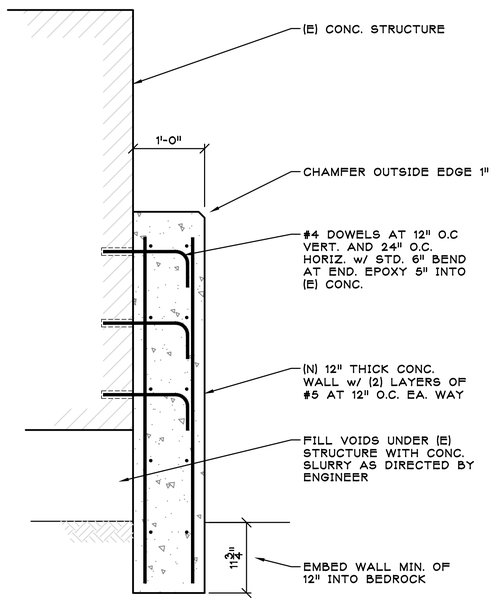

(N) CONC. WALL TO (E) CONC. 10/S1

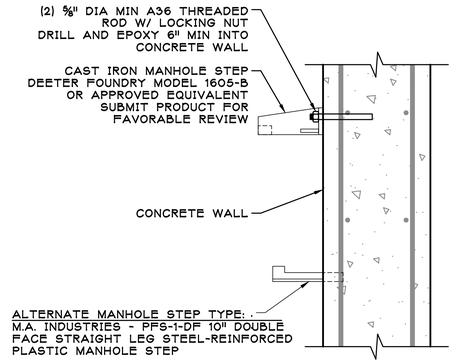

NOTE:
ENGINEER IN FIELD WILL DETERMINE LOCATION AND TYPE OF MANHOLE STEP TO USE

MANHOLE STEP ANCHORAGE 7/S1

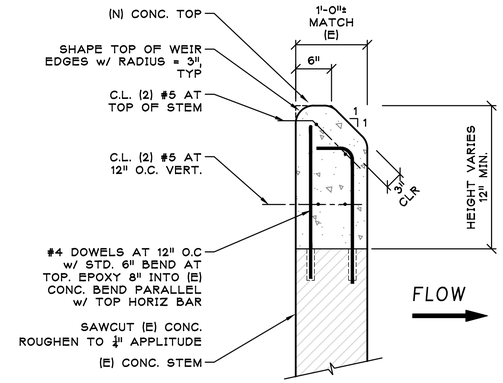

TOP OF CONC. WEIR DETAIL 4/S1

DETAIL NOT USED

1/S1

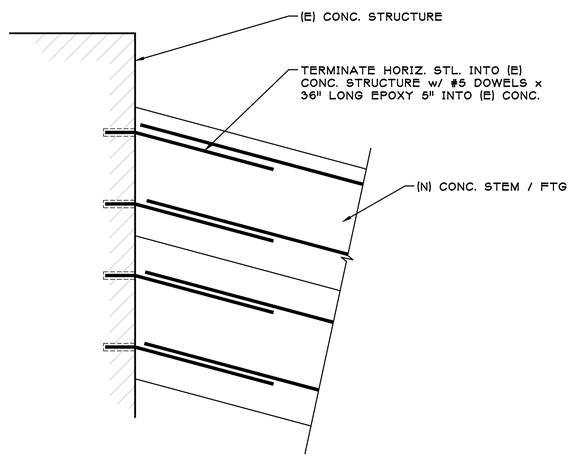

WEIR TO (E) CONC. CONN. 8/S1

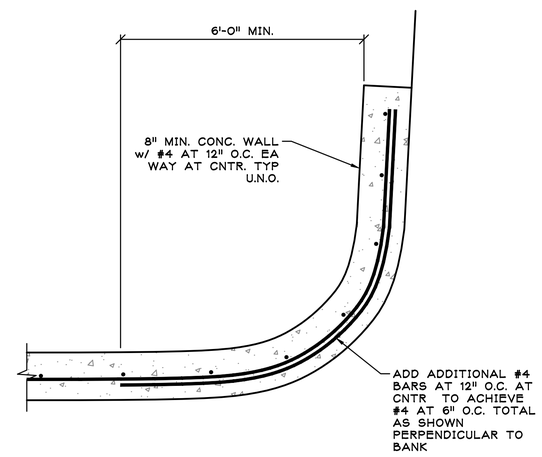

SLAB REINFORCING 5/S1

Stair Details

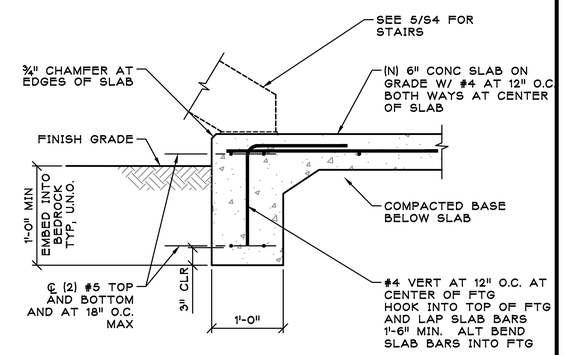

TYP CONCRETE SLAB EDGE 2/S1

Stair Details

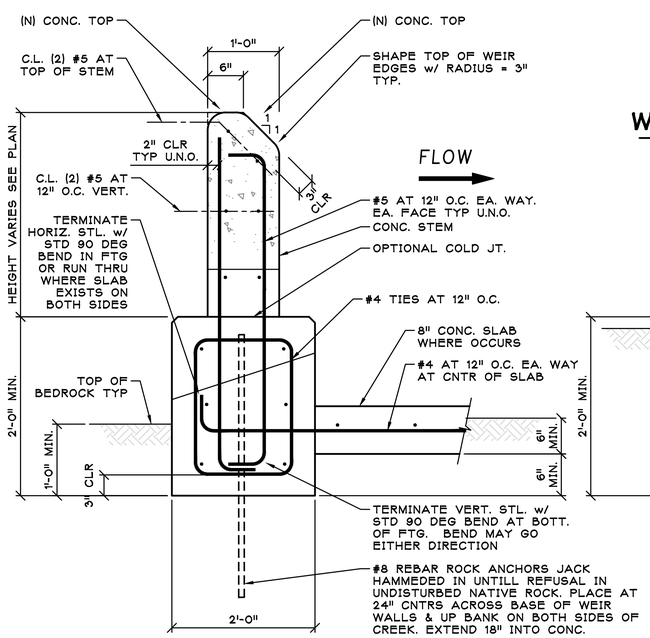

TYP. CONC. WEIR / FTG 11/S1

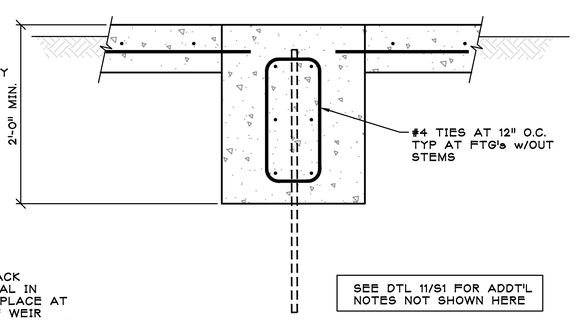

SEE DTL 11/S1 FOR ADDT'L NOTES NOT SHOWN HERE

CONC. WEIR FTG 9/S1

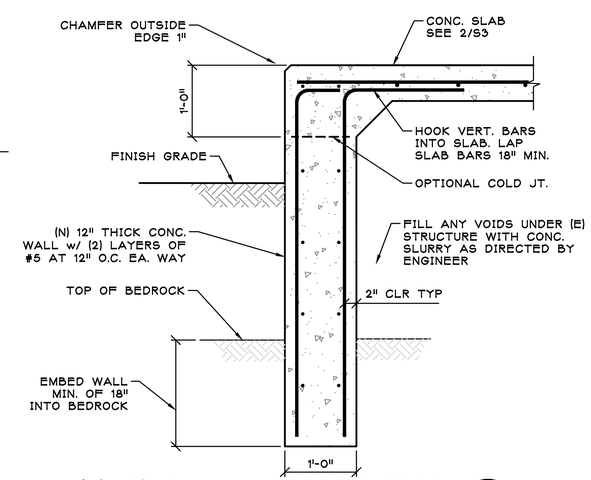

(N) CONC. WALL AT SLAB EDGE 6/S1

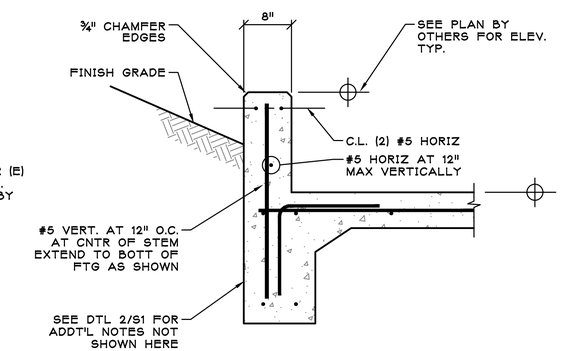

CONCRETE SLAB EDGE w/ CURB 3/S1

Stair Details

REVISIONS	BY
1 7-5-22	BS
2	
3	
4	
5	
6	

Streeter Group, Inc.
Architecture&Structural Engineering
2571 Main Street Suite C Soquel CA 95073
Phone: (831) 477-1781 www.streetergroup.com

FALL CREEK FISH LADDER IMPROVEMENT PROJECT

DETAILS

REGISTERED PROFESSIONAL ENGINEER SCOTT STREETER SE 1734 Exp. 6/23 STRUCTURAL STATE OF CALIFORNIA

DATE:	9-9-22
SCALE:	AS NOTED
DRAWN BY:	
CHECK BY:	
CAD FILE:	
JOB NO:	20002
SHEET	S1
OF 33 SHEETS	

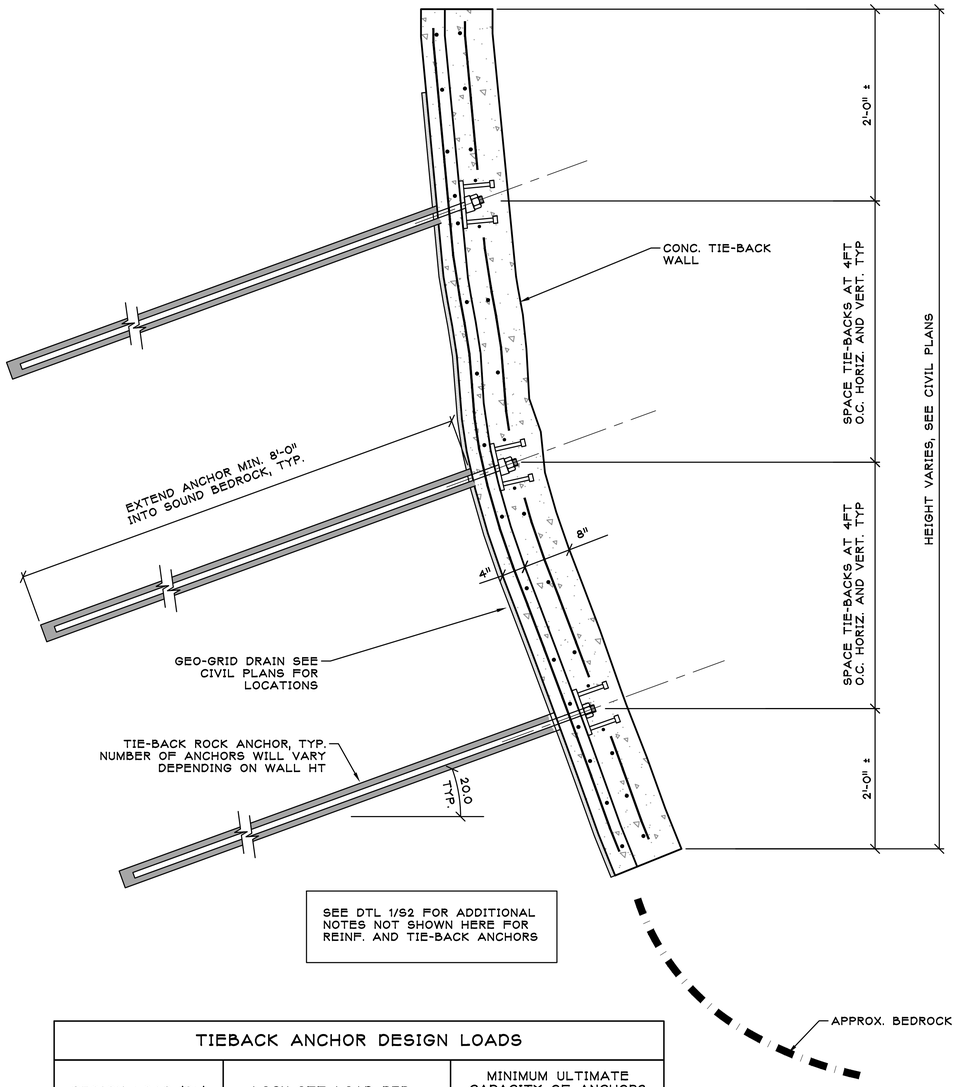

SEE DTL 1/S2 FOR ADDITIONAL NOTES NOT SHOWN HERE FOR REINF. AND TIE-BACK ANCHORS

TIEBACK ANCHOR DESIGN LOADS		
DESIGN LOAD (DL) PER ANCHOR	LOCK-OFF LOAD PER ANCHOR	MINIMUM ULTIMATE CAPACITY OF ANCHORS AND ALL CONNECTIONS (FOS=2)
7 KIPS	HAND WRENCH	14 KIPS

(N) CONC. TIE-BACK WALL 2/S2

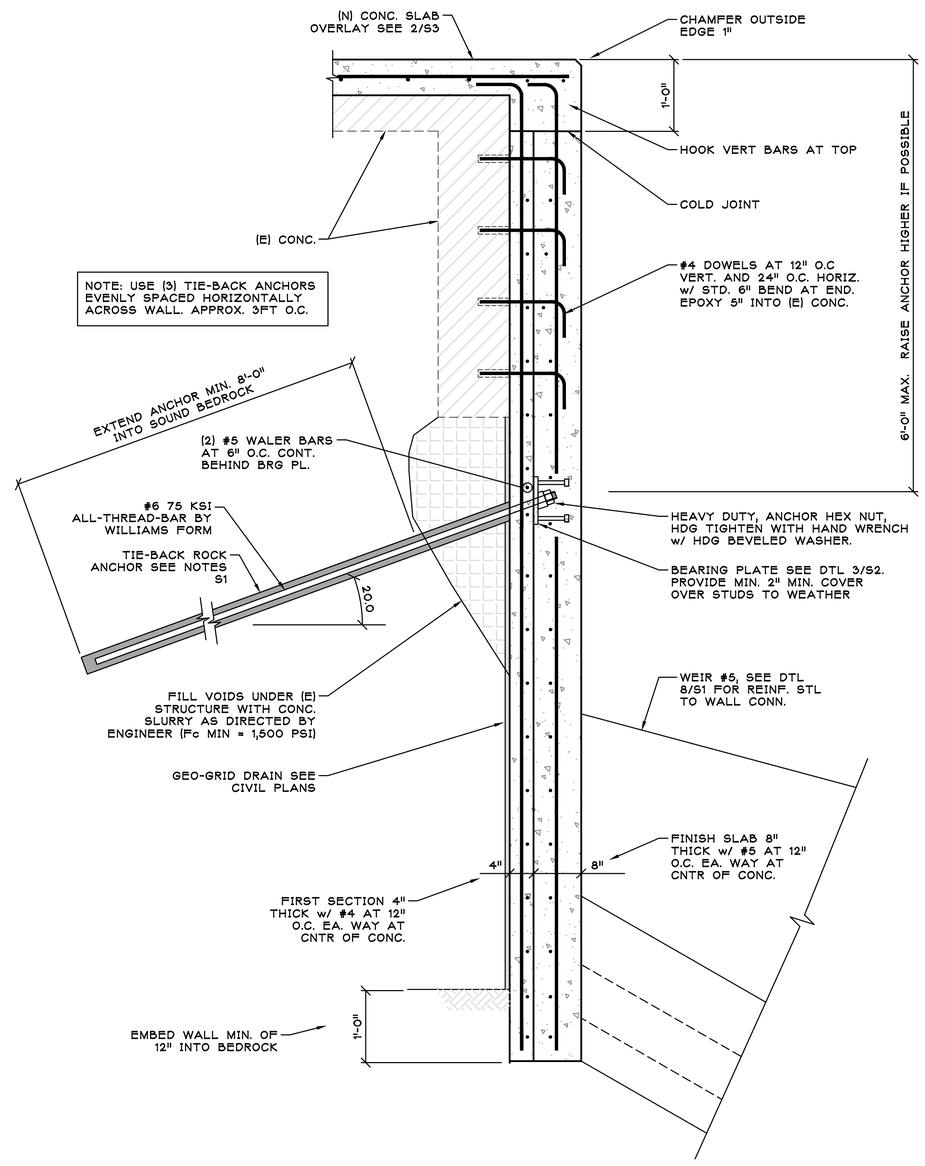

TIEBACK ANCHOR DESIGN LOADS		
DESIGN LOAD (DL) PER ANCHOR	LOCK-OFF LOAD PER ANCHOR	MINIMUM ULTIMATE CAPACITY OF ANCHORS AND ALL CONNECTIONS (FOS=2)
7 KIPS	HAND WRENCH	14 KIPS

(N) CONC. WALL TO (E) CONC. 1/S2

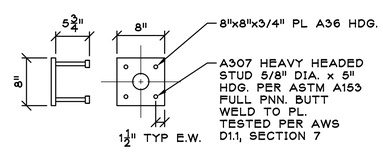

BEARING PLATE WITH STUDS 3/S2

REVISIONS	BY
1	
2	
3	
4	
5	
6	

Streeter Group, Inc.
Architecture&Structural Engineering
2571 Main Street Suite C Soquel CA 95073
Phone: (831) 477-1781 www.streetergroup.com

FALL CREEK FISH LADDER IMPROVEMENT PROJECT

REGISTERED PROFESSIONAL ENGINEER SCOTT STREETER STATE OF CALIFORNIA SE 8724 EXP. 6/23

WALL DETAILS

DATE: 9-9-22
SCALE: AS NOTED
DRAWN BY:
CHECK BY:
CAD FILE:
JOB NO: 20002
SHEET S2
OF 33 SHEETS

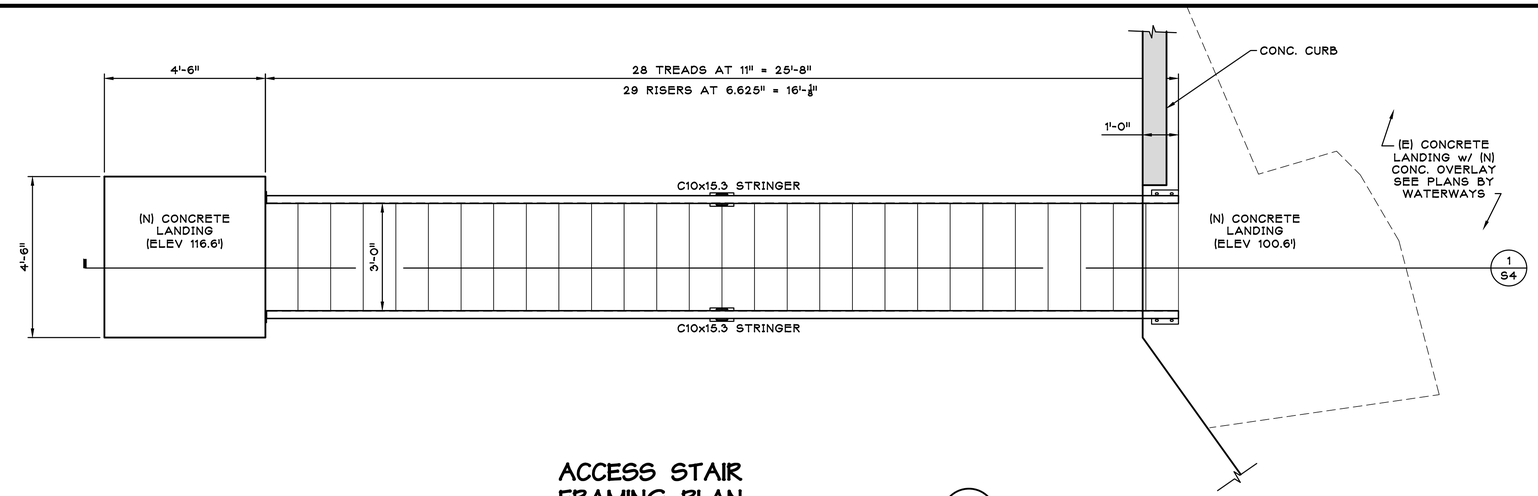

ACCESS STAIR FRAMING PLAN

1
S3

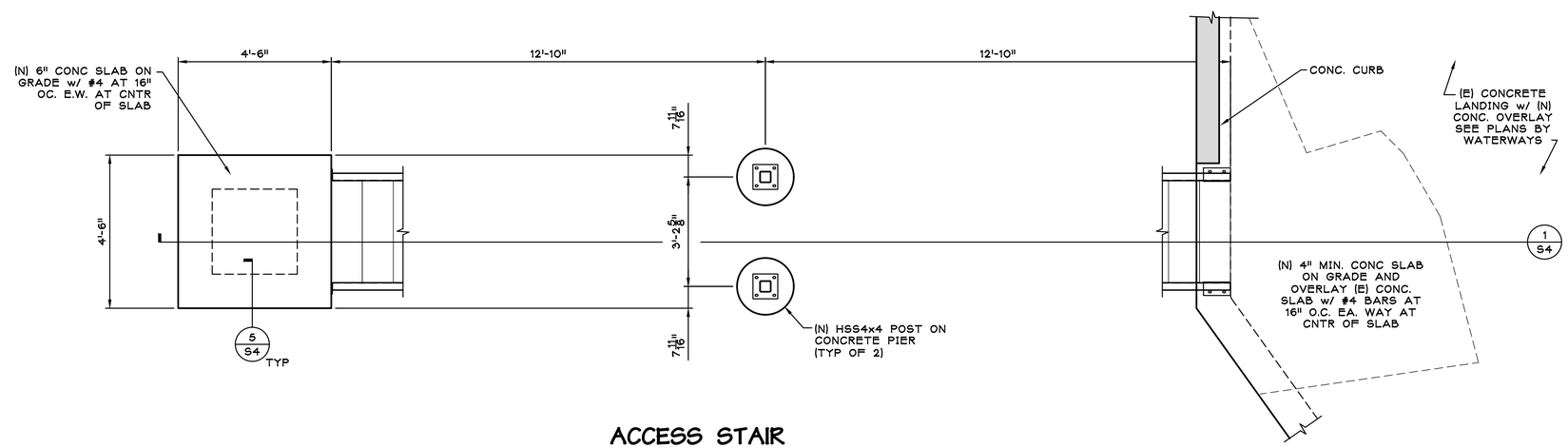

ACCESS STAIR FOUNDATION PLAN

2
S3

REVISIONS	BY
1	
2	
3	
4	
5	
6	

Streeter Group, Inc.
Architecture&Structural Engineering
2571 Main Street Suite C Soquel CA 95073
Phone: (831) 477-1781 www.streetergroup.com

FALL CREEK FISH LADDER IMPROVEMENT PROJECT

REGISTERED PROFESSIONAL ENGINEER SCOTT STREETER SE 8724 EXP. 6/23 STRUCTURAL STATE OF CALIFORNIA

ACCESS STAIR PLANS

DATE: 9-9-22
SCALE: AS NOTED
DRAWN BY:
CHECK BY:
CAD FILE:
JOB NO: 20002
SHEET S3
OF 33 SHEETS

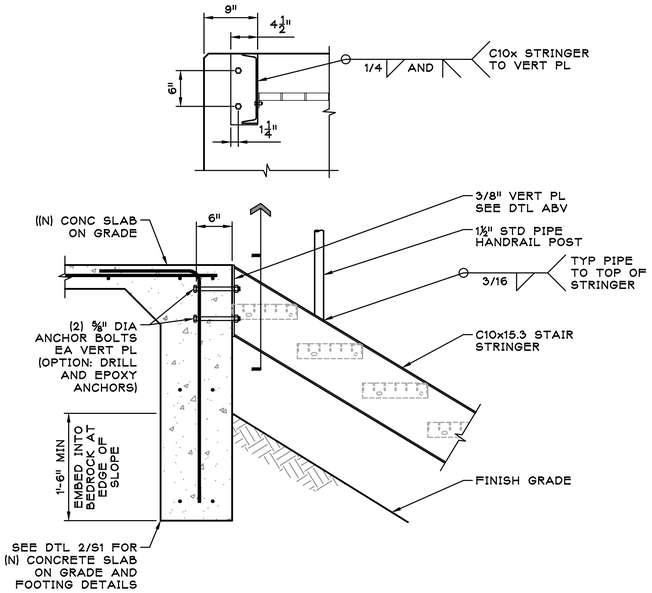

STAIR STRINGER AT TOP

Stair Details 6/S4

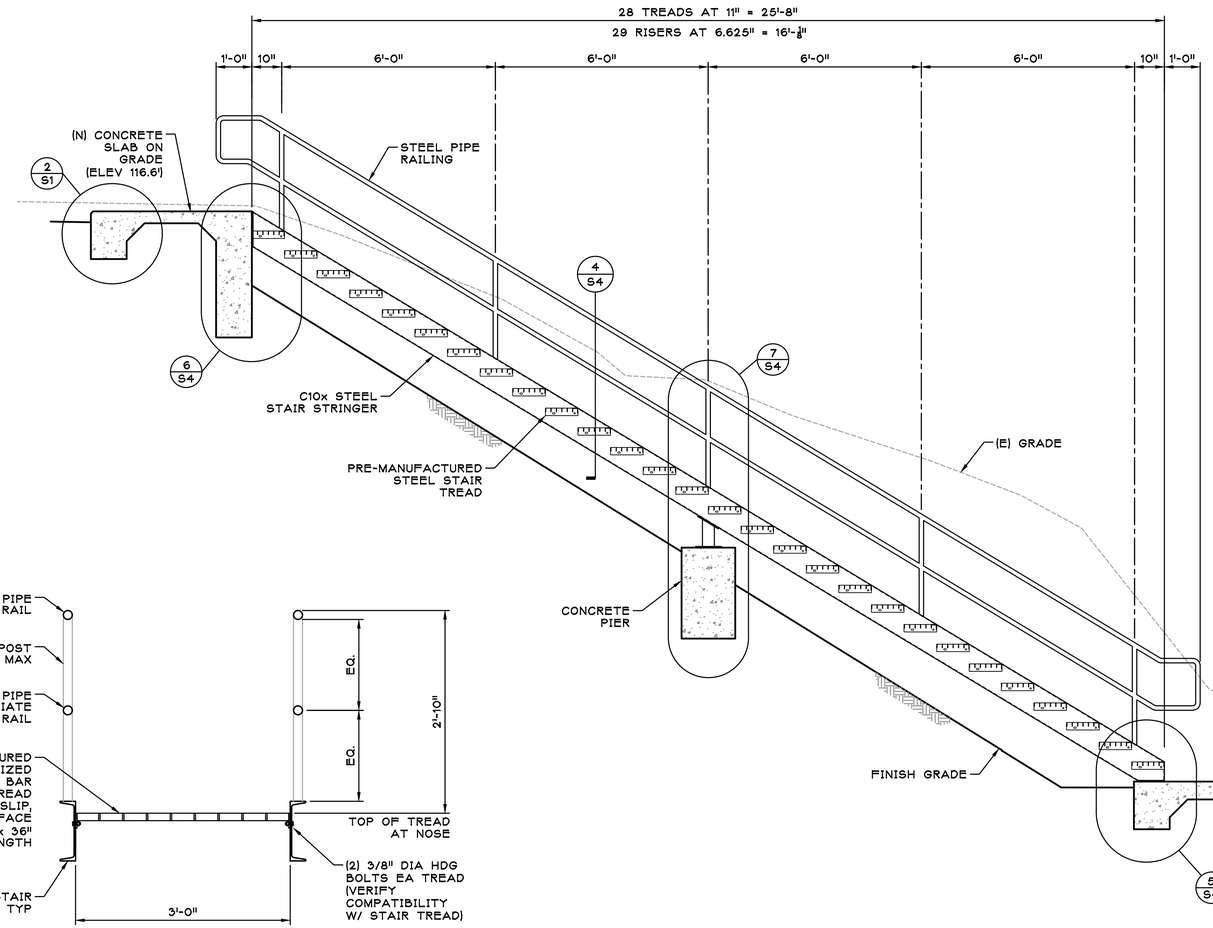

ACCESS STAIR SECTION

1/S4

STAIR STRINGER AT MIDSPAN

Stair Details 7/S4

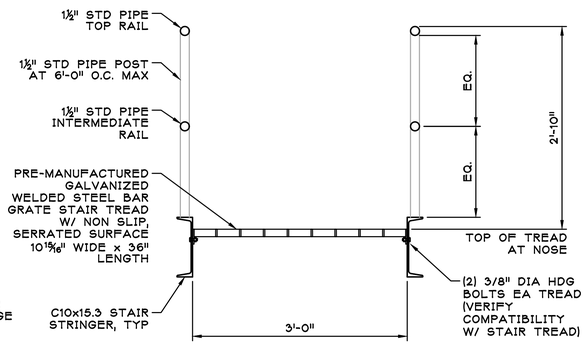

TRANSVERSE STAIR SECTION

Stair Details 4/S4

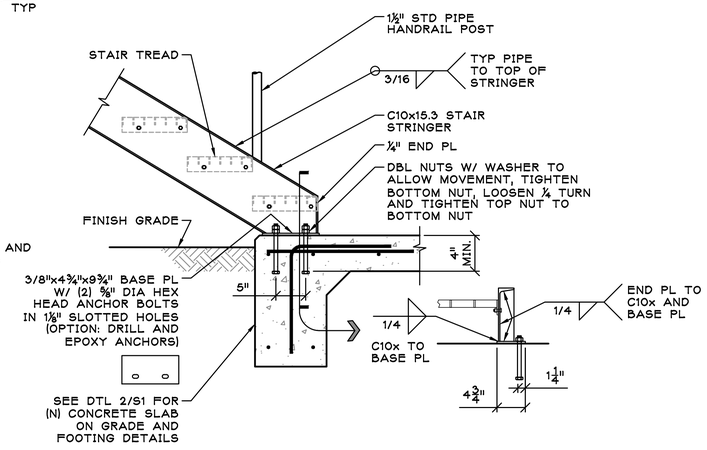

STAIR STRINGER AT BASE

Stair Details 5/S4

DETAIL NOT USED

3/S3

DETAIL NOT USED

2/S4

REVISIONS	BY
1	
2	
3	
4	
5	
6	

Streeter Group, Inc.
Architecture&Structural Engineering
2571 Main Street,Suite C Soquel,CA 95073
Phone: (831) 477-1781 www.streetergroup.com

FALL CREEK FISH LADDER IMPROVEMENT PROJECT

ACCESS STAIR DETAILS

DATE:	9-9-22
SCALE:	AS NOTED
DRAWN BY:	
CHECK BY:	
CAD FILE:	
JOB NO:	20002
SHEET	S4
OF 33 SHEETS	