# SAN LORENZO VALLEY WATER DISTRICT
# QUAIL HOLLOW ROAD PIPELINE REPLACEMENT


OWNER:
SAN LORENZO VALLEY WATER DISTRICT (SLVWD)
(831) 338-2153
13060 HIGHWAY 9
BOULDER CREEK, CA 95006

CIVIL ENGINEER:
SCHAAF & WHEELER
(831) 883-4848
3 QUAIL RUN CIRCLE, SUITE 101
SALINAS, CA 93907

GEOTECH ENGINEER:
CAL ENGINEERING & GEOLOGY
(925) 935-9771
785 YGNACIO VALLEY ROAD
WALNUT CREEK, CA 94596


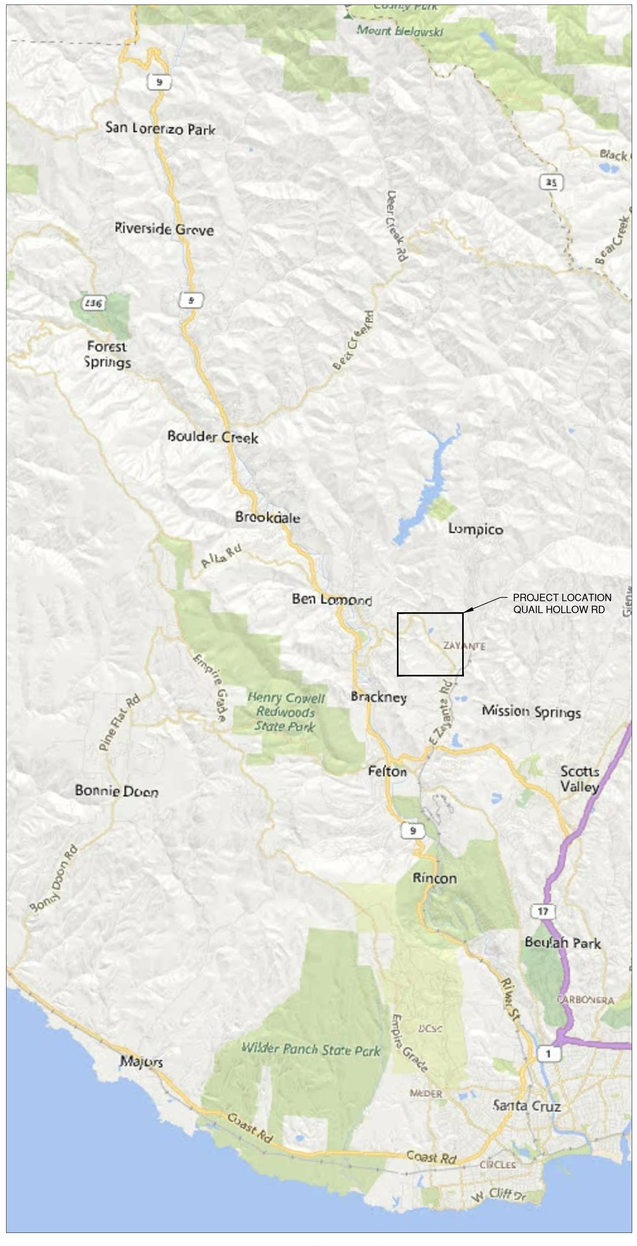


VICINITY MAP

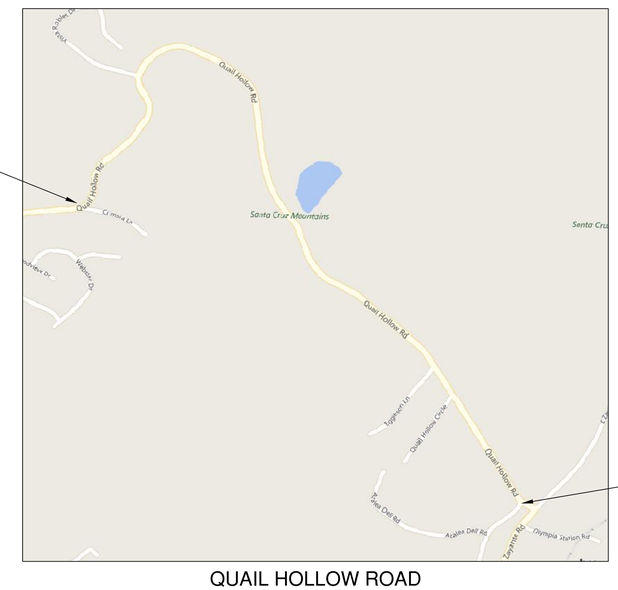


QUAIL HOLLOW ROAD
SITE

**UNDERGROUND SERVICE ALERT**
**CALL: TOLL FREE**
**1-800**
**227-2600**
**TWO WORKING DAYS BEFORE YOU DIG**

| REV. NO. | DESCRIPTION | BY | DATE |
|---|---|---|---|
| 1 | | | |
| 2 | | | |
| 3 | | | |
| 4 | | | |
| 5 | | | |

Schaaf & Wheeler
CONSULTING CIVIL ENGINEERS
3 Quail Run Circle, Suite 101
Salinas, CA 93907-2348
(831) 883-4848

REGISTERED PROFESSIONAL ENGINEER
ANDREW A. STOBBENZ
No. 69703
CIVIL
STATE OF CALIFORNIA

TITLE SHEET
**QUAIL HOLLOW ROAD PIPELINE REPLACEMENT**

San Lorenzo Valley WATER DISTRICT

| | | |
|---|---|---|
| DESIGNED BY: | JCT | DATE: 7/12/2021 |
| DRAWN BY: | JCT | DATE: 7/12/2021 |
| QC CHECKED BY: | AAS | DATE: 7/12/2021 |
| PROJECT NO.: | | |
| SCALE: | NO SCALE | |
| SUBMITTAL: | 100% SUBMITTAL | |

G1.0
SHEET 1 OF 14

C:\USERS\JTABUE\DESKTOP\SLVWD OH\QUAIL HOLLOW WORKING\SLVWD_QUAILHOLLOWTITLE.DWG 7/12/2021 BY JTABUE

## ABBREVIATIONS

| | | | |
|---|---|---|---|
| AB | AGGREGATE BASE | LOC | LOCATION |
| AC | ASPHALT CONCRETE | MB | MAILBOX |
| APPROX | APPROXIMATE | MSB | MAIN SWITCHBOARD |
| AWWA | AMERICAN WATERWORKS ASSOC | MH | MANHOLE |
| BLDG | BUILDINGS | MAX | MAXIMUM |
| BLRDS | BOLLARDS | MJ | MECHANICAL JOINT |
| BTFLY | BUTTERFLY | MIN | MINIMUM |
| BTW | BETWEEN | MIP | MALE IRON PIPE |
| CL | CENTERLINE | MCC | MOTOR CONTROL CENTER |
| COM | COMMUNICATION | N | NORTH |
| CP | CONTROL POINT | (N) | NEW |
| CV | CHECK VALVE | N.I.C | NOT IN CONTRACT |
| CVR | COVER | NPT | NATIONAL PIPE THREAD |
| CLR | CLEAR | NSHT | NATIONAL STANDARD HOSE THREAD |
| CMP | CORRUGATED METAL PIPE | NTS | NOT TO SCALE |
| CONC | CONCRETE | O.C. | ON CENTER |
| CPT | CONTROL POINT | OD | OUTSIDE DIAMETER |
| CFS | CUBIC FEET PER SECOND | OH | OVERHEAD |
| CYC | CYCLONE | PNL | PANEL |
| DL | DAYLIGHT | PE | PLAIN END, POLYETHYLENE |
| DET | DETAIL | PVC | POLY-VINYL CHLORIDE |
| DIA | DIAMETER | PSI | POUNDS PER SQUARE INCH |
| DBL | DOUBLE | PP | POWER POLE |
| DWGS | DRAWINGS | (P) | PROPOSED |
| DWY | DRIVEWAY | RED | REDUCER |
| DI | DUCTILE IRON | RCP | REINFORCED CONCRETE PIPE |
| DIP | DUCTILE IRON PIPE | R/W | RIGHT-OF-WAY |
| EA | EACH | RSR | RISER |
| EP | EDGE OF PAVEMENT | RD | ROAD |
| ESMT | EASEMENT | SCH | SCHEDULE |
| E | EAST | SPECS | SPECIFICATIONS |
| EP | EDGE OF PAVEMENT | SS | SANITARY SEWER |
| ELEC, ELECT | ELECTRICAL | SSCO | SANITARY SEWER CLEANOUT |
| EL,ELEV | ELEVATION | SSFM | SANITARY SEWER FORCE MAIN |
| ELL | ELBOW | SSMH | SANITARY SEWER MANHOLE |
| EQUIP | EQUIPMENT | SRVP | SERVICE POLE |
| (E) | EXISTING | SP | STATIC PRESSURE |
| (F) | FUTURE | STA | STATION |
| FIPT | FEMALE IRON PIPE THREAD | STD | STANDARD |
| FNPT | FEMALE NATIONAL PIPE THREAD | STL | STEEL |
| FEN | FENCE | SD | STORM DRAIN |
| FF | FINISH FLOOR | SL | STREET LIGHT |
| FLG, FL | FLANGE | STS | STREET NAME SIGN |
| FL, FLR | FLOW LINE | TCE | TEMPORARY CONSTRUCTION EASEMENT |
| GAL | GALLON(S) | TOD | TOP OF DITCH |
| GPM | GALLONS PER MINUTE | TOS | TOP OF SLOPE |
| GALV | GALVANIZED | TS | TRAFFIC SIGN |
| GV | GATE VALVE | TYP | TYPICAL |
| GB | GRADE BREAK | VLTS | VAULTS |
| GS | GALVANIZED STEEL | W | WATER |
| HW | HEADWALL | WH | WHARF HYDRANT |
| HP | HORSEPOWER | WM | WATER MAIN |
| HDPE | HIGH-DENSITY POLYETHYLENE | W/ | WITH |
| ID | INSIDE DIAMETER | WSP | WELDED STEEL PIPE |
| INV | INVERT | WD | WOOD |
| IW | INDUSTRIAL WASTE | WDFE | WOOD FENCE |
| IPS | IRON PIPE SIZE | | |

## LEGEND

| EXISTING | DESCRIPTION | PROPOSED |
|---|---|---|
| | EASEMENT | |
| | TEMPORARY CONSTRUCTION EASEMENT | TCE |
| | PROPERTY LINE - R/W | |
| | LIMIT OF WORK | |
| X X X X | CYCLONE FENCE | X X |
| | WOOD FENCE | |
| W | WATER LINE | W W |
| OHE | OVERHEAD ELECTRIC | |
| 181.44 | SPOT ELEVATION | 181.44 |
| | DRAIN PIPE | |
| | REMOVE AND DISPOSE | |
| | EDGE OF (E) PAVEMENT | |
| | MAJOR CONTOUR LINE (TOPO) | |
| | MINOR CONTOUR LINE (TOPO) | |
| | LIMIT OF GRADING | |
| E | BURIED ELECTRIC | |
| T | TELEPHONE | |
| OH | OVERHEAD COMMUNICATION | |
| | VEGETATION | |
| SD | STORM DRAIN PIPE | SD |
| | WATER VALVE | |
| | MANHOLE | |
| | CONTROL POINT | |
| | FOUND MONUMENT AS NOTED | |
| 60"K | EXISTING TREE & TYPE | |
| 4"..6"K | TREE CLUSTER WITH SIZE | |
| CYP | CYPRESS | |
| K | OAK | |
| P | PINE | |
| RDWD | REDWOOD | |
| T | TREE (MISC) | |

SHEET INDEX


| | | |
|---|---|---|
| 1 | G1.0 | TITLE SHEET |
| 2 | G1.1 | LEGEND, ABBREVIATIONS, & SHEET INDEX |
| 3 | G1.2 | GENERAL NOTES |
| 4 | C4.1 | QUAIL HOLLOW ROAD OVERALL PLAN |
| 5 | C4.2 | QUAIL HOLLOW ROAD PLAN & PROFILE I |
| 6 | C4.3 | QUAIL HOLLOW ROAD PLAN & PROFILE II |
| 7 | C4.4 | QUAIL HOLLOW ROAD PLAN & PROFILE III |
| 8 | C4.5 | QUAIL HOLLOW ROAD PLAN & PROFILE IV |
| 9 | C4.6 | QUAIL HOLLOW ROAD PLAN & PROFILE V |
| 10 | C4.7 | QUAIL HOLLOW ROAD PLAN & PROFILE VI |
| 11 | C4.8 | QUAIL HOLLOW ROAD PLAN & PROFILE VII |
| 12 | C6.1 | STANDARD DETAILS I |
| 13 | C6.2 | STANDARD DETAILS II |
| 14 | C6.3 | DETAILS |


**UNDERGROUND SERVICE ALERT**
**CALL: TOLL FREE**
**1-800**
**227-2600**
**TWO WORKING DAYS BEFORE YOU DIG**

| REV. NO. | DESCRIPTION | BY | DATE |
|---|---|---|---|
| 1 | | | |
| 2 | | | |
| 3 | | | |
| 4 | | | |
| 5 | | | |


Schaaf & Wheeler
CONSULTING CIVIL ENGINEERS
3 Quail Run Circle, Suite 101
Salinas, CA 93907-2348
(831) 883-4848


REGISTERED PROFESSIONAL ENGINEER NAGEEB A. STEPHENS No. 69703 CIVIL STATE OF CALIFORNIA

**LEGEND, ABBREVIATIONS, & SHEET INDEX**

**QUAIL HOLLOW ROAD PIPELINE REPLACEMENT**

San Lorenzo Valley WATER DISTRICT

| | | |
|---|---|---|
| DESIGNED BY: | JCT | DATE: 7/12/2021 |
| DRAWN BY: | JCT | DATE: 7/12/2021 |
| QC CHECKED BY: | AAS | DATE: 7/12/2021 |
| PROJECT NO.: | | |
| SCALE: | NO SCALE | |
| SUBMITTAL: | 100% SUBMITTAL | |

G1.1

SHEET 2 OF 14

C:\USERS\JTABUE\DESKTOP\SLVWD QHQUAIL HOLLOW WORKING\SLVWD_PIPELINES-NOTES.DWG 7/12/2021 BY JTABUE

## GENERAL NOTES:

1. SHOULD IT APPEAR THAT THE WORK TO BE PERFORMED OR ANY MATTER RELATIVE THERETO, IS NOT SUFFICIENTLY DETAILED OR EXPLAINED ON THESE PLANS, THE CONTRACTOR SHALL CONTACT THE DISTRICT ENGINEER AT 831-338-2153 WITH ANY QUESTIONS OR DISCREPANCIES. ANY REVISIONS REQUIRE OWNER'S APPROVAL BEFORE PROCEEDING WITH REVISED PLANS.
2. UNAUTHORIZED CHANGES AND USES: THE ENGINEER PREPARING THESE PLANS WILL NOT BE RESPONSIBLE OR LIABLE FOR UNAUTHORIZED CHANGES TO OR USES OF THESE PLANS. ALL CHANGES TO THESE PLANS MUST BE MADE IN WRITING AND APPROVED BY THE PREPARER OF THESE PLANS.
3. CONSTRUCTION CONTRACTOR AGREES THAT THE IN ACCORDANCE WITH GENERALLY ACCEPTED CONSTRUCTION PRACTICES, THE CONSTRUCTION CONTRACTOR SHALL BE REQUIRED TO ASSUME SOLE AND COMPLETE RESPONSIBILITY OF THE JOB SITE CONDITIONS DURING THE COURSE OF CONSTRUCTION OF THE PROJECT, INCLUDING SAFETY OF ALL PERSONS AND PROPERTY; THAT THIS REQUIREMENT SHALL BE MADE TO APPLY CONTINUOUSLY AND NOT BE LIMITED TO NORMAL WORKING HOURS, AND CONSTRUCTION CONTRACTOR FURTHER AGREES TO DEFEND, INDEMNIFY AND HOLD THE CIVIL ENGINEER AND THE OWNER HARMLESS FROM ANY AND ALL LIABILITY, REAL OR ALLEGED, IN CONNECTION WITH THE PERFORMANCE OF THE WORK ON THIS PROJECT, EXCEPTING LIABILITY ARISING FROM THE SOLE NEGLIGENCE OF THE CIVIL ENGINEER.
4. ALL WORK SHALL BE PERFORMED IN ACCORDANCE WITH ACCEPTED WORKMANSHIP PRACTICE AND THESE PLANS. ORDERS GIVEN BY THE OWNER REPRESENTATIVE RELATING TO THE QUALITY OF MATERIALS AND WORKMANSHIP SHALL BE COMPLIED WITH PROMPTLY BY THE CONTRACTOR.
5. CONTRACTOR SHALL POSSESS A VALID CLASS A - GENERAL ENGINEERING CONTRACTOR LICENSE AT THE TIME THE CONTRACT IS AWARDED AND SHALL MAINTAIN THROUGHOUT THE LENGTH OF CONTRACT. SUB-CONTRACTORS SHALL POSSES VALID LICENSE(S) FOR THE PORTION(S) OF THE WORK THEY ARE PERFORMING.
6. THE CONTRACTOR SHALL POST EMERGENCY TELEPHONE NUMBERS AT THE JOB SITE FOR THE SAN LORENZO VALLEY WATER DISTRICT, COUNTY PUBLIC WORKS, AMBULANCE, POLICE AND FIRE DEPARTMENTS. CONTRACTOR SHALL POST SIGN AT JOB SITE BEARING OWNER'S NAME AND SITE ADDRESS. PROPERTY CORNERS SHALL BE CLEARLY MARKED.
7. THE CONTRACTOR SHALL OBTAIN ALL PERMITS AND LICENSES REQUIRED FOR THE CONSTRUCTION AND COMPLETION OF THE PROJECT.
8. CONTRACTOR SHALL CONFORM TO THE RULES AND REGULATIONS OF THE STATE CONSTRUCTION SAFETY ORDERS PERTAINING TO EXCAVATION AND TRENCHING. CONTRACTOR SHALL BEAR FULL RESPONSIBILITY FOR TRENCH SHORING DESIGN AND INSTALLATION.
9. THE CONTRACTOR'S ATTENTION IS DIRECTED TO THE REQUIREMENTS OF THE DIVISION OF INDUSTRIAL SAFETY PERTAINING TO "CONFINED SPACES". ANY MANHOLE, CULVERT, DROP INLET OR TRENCH (WHICH COULD CONTAIN AIR) THAT IS NOT READILY VENTILATED MAY BE CONSIDERED A "CONFINED SPACE".
10. EXCAVATION SHALL BE ADEQUATELY SHORED, BRACED AND SHEETED SO THAT THE EARTH WILL NOT SLIDE OR SETTLE AND SO THAT ALL EXISTING IMPROVEMENTS OF ANY KIND WILL BE FULLY PROTECTED FROM DAMAGE. ANY DAMAGE RESULTING FROM A LACK OF ADEQUATE SHORING, BRACING AND SHEETING SHALL BE THE RESPONSIBILITY OF THE CONTRACTOR AND HE SHALL EFFECT NECESSARY REPAIRS OR RECONSTRUCTION AT HIS OWN EXPENSE. WHERE THE EXCAVATION FOR A CONDUIT TRENCH, STRUCTURE AND/OR BORING AND JACKING PIT IS REQUIRED, THE CONTRACTOR SHALL CONFORM TO THE APPLICABLE CONSTRUCTION SAFETY ORDERS OF THE DIVISION OF INDUSTRIAL SAFETY OF THE STATE OF CALIFORNIA. THE CONTRACTOR SHALL ALWAYS COMPLY WITH OSHA REQUIREMENTS.
11. THE EXISTENCE AND LOCATION OF ANY UNDERGROUND UTILITIES OR STRUCTURES SHOWN ON THESE PLANS WERE OBTAINED BY A SEARCH OF AVAILABLE RECORDS. APPROVAL OF THESE PLANS BY THE AGENCY DOES NOT GUARANTEE THE ACCURACY, COMPLETENESS, LOCATION OR THE EXISTENCE OR NON-EXISTENCE OF ANY UTILITY PIPE OR STRUCTURE WITHIN THE LIMITS OF THIS PROJECT. THE CONTRACTOR IS REQUIRED TO TAKE ALL DUE PRECAUTIONARY MEANS NECESSARY TO PROTECT EXISTING UTILITY LINES.
12. CONTRACTOR SHALL HAVE UTILITIES LOCATED BY CALLING UNDERGROUND SERVICE ALERT (USA) NORTH AT (800) 227-2600 OR 811 AT LEAST 48-HOURS PRIOR TO START OF CONSTRUCTION. IT SHALL BE THE CONTRACTOR'S RESPONSIBILITY TO NOTIFY THE ENGINEER AND THE OWNER OF ANY DIFFERENCES IN THE LOCATIONS OF EXISTING UTILITIES SHOWN, OR ANY CONFLICTS WITH THE DESIGN, BEFORE CONTINUING WITH WORK IN THAT AREA.
13. SHOULD IT APPEAR THAT THE WORK TO BE DONE, OR ANY MATTER RELATIVE THERETO, IS NOT SUFFICIENTLY DETAILED OR EXPLAINED ON THESE PLANS, THE CONTRACTOR SHALL CONTACT THE ENGINEER AT (831) 338-2153 FOR SUCH FURTHER EXPLANATIONS AS MAY BE NECESSARY.
14. THE CONTRACTOR SHALL PROVIDE ALL LIGHTS, SIGNS, BARRICADES, FLAGMEN AND OTHER DEVICES NECESSARY TO PROVIDE FOR PUBLIC SAFETY AND TO MAINTAIN TRAFFIC CONTROL AT ALL TIMES.
15. THE CONTRACTOR SHALL NOT DESTROY ANY PERMANENT SURVEY POINTS. ANY PERMANENT MONUMENTS OR POINTS DESTROYED SHALL BE REPLACED BY A LICENSED ENGINEER OR LICENSED SURVEYOR AT THE CONTRACTOR'S EXPENSE.
16. DURING GRADING OPERATIONS, THE CONTRACTOR SHALL IMPLEMENT DUST CONTROL MEASURES ON SITE AND ON HAUL ROUTES.
17. THE CONTRACTOR SHALL BE RESPONSIBLE FOR PREVENTING AN AIRBORNE DUST NUISANCE FROM THE CONSTRUCTION SITE BY WATERING AND/OR TREATING THE SITE IN SUCH A MANNER TO LIMIT THE EXTENT OF AIRBORNE DUST PARTICLES.
18. SITE WORK HOURS ARE 8:30 A.M. TO 4:00 P.M. MONDAY THROUGH FRIDAY. SITE WORK HOURS ARE REDUCED TO 9:00 A.M. TO 4:00 P.M. WHEN SCHOOL IS IN SESSION, GENERALLY FROM AUGUST 17, 2021 THROUGH JUNE 7, 2022.
19. THE WORK SITE SHALL BE CONTINUALLY MAINTAINED AND KEPT FREE OF TRASH AND CLUTTER. SOLID WASTE SHALL BE STORED IN CLOSED CONTAINERS AND TRANSPORTED TO AN APPROVED DUMPSITE ON A REGULAR BASIS.
20. THESE PLANS SHOW EXISTING FEATURES INCLUDING BUT NOT LIMITED TO TREES, UTILITIES AND STRUCTURES THAT MAY BE AFFECTED BY THE CONSTRUCTION OR PLACEMENT OF THE PROPOSED ENGINEERED IMPROVEMENTS SHOWN ON THESE PLANS. THE CONTRACTOR SHALL BE RESPONSIBLE TO IMMEDIATELY NOTIFY THE ENGINEER IF THERE ARE ANY EXISTING FACILITIES, WHETHER SHOWN OR NOT SHOWN ON THESE PLANS, WHICH COULD IN ANY WAY BE IN POTENTIAL CONFLICT WITH THE DESIGN ON THESE PLANS. ALL WORK WITHIN THE VICINITY OF POTENTIAL CONFLICT SHALL CEASE UNTIL AN ADEQUATE AND APPROPRIATE SOLUTION IS DETERMINED BY THE ENGINEER/OWNER'S REPRESENTATIVE AND APPROVED BY THE OWNER.
21. CONTRACTOR IS RESPONSIBLE FOR CONSTRUCTION SITE STORM WATER POLLUTION PREVENTION AND IMPLEMENTING NECESSARY BEST MANAGEMENT PRACTICES. EROSION CONTROL MEASURES SHALL BE IN PLACE AT THE END OF EACH WORKING DAY. WET SEASON CONTROLS ARE REQUIRED (MINIMUM) BETWEEN OCTOBER 15 AND APRIL 15.
22. THE CONTRACTOR SHALL COMPLY WITH ALL RULES, REGULATIONS AND PROCEDURES OF THE NATIONAL POLLUTANT DISCHARGE ELIMINATION SYSTEM (NPDES) FOR MUNICIPAL, CONSTRUCTION AND INDUSTRIAL ACTIVITIES AS PROMULGATED BY THE CALIFORNIA STATE WATER RESOURCES CONTROL BOARD OR ANY OF ITS' REGIONAL WATER QUALITY CONTROL BOARDS. REFER TO THE FOLLOWING GENERAL PERMITS
    a. WQO 2009-0009-DWQ, GENERAL PERMIT FOR STORM WATER DISCHARGES ASSOCIATED WITH CONSTRUCTION AND LAND DISTURBANCE ACTIVITIES, WITH AMENDMENTS
    b. WQO 2013-0001-DWQ, GENERAL PERMIT FOR STORM WATER DISCHARGES FROM SMALL MUNICIPAL SEPARATE STORM SEWER SYSTEMS (MS4S)
    c. WQO 2014-0194-DWQ, NPDES PERMIT FOR DRINKING WATER DISCHARGES TO WATERS OF THE UNITED STATES
23. IF ARCHAEOLOGICAL RESOURCES OR HUMAN REMAINS ARE DISCOVERED DURING CONSTRUCTION, THE COUNTY CORONER SHALL BE NOTIFIED AND WORK SHALL BE HALTED TO WITHIN 150-FEET OF THE FIND UNTIL IT CAN BE EVALUATED BY A QUALIFIED PROFESSIONAL ARCHAEOLOGIST. IF THE FIND IS SIGNIFICANT, APPROPRIATE MITIGATION MEASURES SHALL BE FORMULATED BY A QUALIFIED ARCHAEOLOGIST AND IMPLEMENTED BY THE CONTRACTOR.
24. UPON COMPLETION OF THE WORK, THE CONTRACTOR SHALL CERTIFY THAT ALL WORK WAS PERFORMED IN ACCORDANCE WITH THE REQUIREMENTS OF THE CONTRACT DOCUMENTS. THE CONTRACTOR SHALL SUBMIT TWO SETS OF 'RED-LINE" AS-BUILT PLANS SHOWING ALL CHANGES TO THE OWNER PRIOR TO FINAL ACCEPTANCE OF THE IMPROVEMENTS.
25. THE CONTRACTOR SHALL TAKE ALL NECESSARY MEASURES TO KEEP PUBLIC STREETS FREE FROM DIRT AND DEBRIS. SHOULD ANY DIRT OR DEBRIS BE DEPOSITED IN PUBLIC RIGHT-OF-WAY, THE CONTRACTOR SHALL REMOVE IT IMMEDIATELY.
26. CONTRACTOR SHALL REPLACE, AT HIS EXPENSE, ALL TREES, SHRUBS, LAWNS, FENCES, IRRIGATION SYSTEMS AND IMPROVEMENTS WHICH ARE TO REMAIN INTACT BUT ARE REMOVED OR DAMAGED DURING CONSTRUCTION. CONTRACTOR SHALL NOT REMOVE OR DAMAGE IMPROVEMENTS LOCATED WITHIN THE PROPERTY WITHOUT WRITTEN PERMISSION FROM THE OWNER.
27. CONTRACTOR SHALL DETERMINE AND PROVIDE FOR TEMPORARY CONSTRUCTION STORAGE AREAS .
28. CONTRACTOR SHALL MAINTAIN ONE-WAY TRAFFIC ON PUBLIC AND PRIVATE ROADS, PAVED OR UNPAVED, ON WHICH WORK IS BEING PERFORMED DURING WORKING HOURS, OR COORDINATE WITH OWNER TO PROVIDE AN ACCEPTABLE DETOUR ROUTE AROUND THE WORKING AREA. MAINTAIN NORMAL TRAFFIC TRAVEL WIDTH DURING NON-WORKING HOURS. REFER TO ENCROACHMENT PERMITS, LICENSES, EASEMENT CONDITIONS AND TRAFFIC PLANS, WHERE APPLICABLE, AS INCLUDED IN THE SPECIFICATIONS.
29. ALL WORK SHALL BE COMPLETED IN ACCORDANCE WITH THESE PLANS AND SPECIFICATIONS. THE FOLLOWING LIST OF STANDARDS ARE/OR SPECIFICATIONS ARE INCORPORATED INTO THESE PLANS BY REFERENCE. DESIGN AND CONSTRUCTION OF ALL IMPROVEMENTS SHALL COMPLY WITH ALL APPLICABLE STANDARDS INCLUDING:
    d. CALIFORNIA WATER WORKS STANDARDS (CALIFORNIA CODE OF REGULATIONS, TITLES 17 AND 22)
    e. AMERICAN WATER WORKS ASSOCIATION (AWWA) STANDARDS
    f. STANDARD SPECIFICATIONS, STATE OF CALIFORNIA DEPARTMENT OF TRANSPORTATION, 2018 EDITION
    g. STANDARD PLANS, STATE OF CALIFORNIA DEPARTMENT OF TRANSPORTATION (CALTRANS), 2018 EDITION
    h. CALIFORNIA OCCUPATIONAL SAFETY AND HEALTH ACT STANDARDS (CAL OSHA)
30. ALL UNDERGROUND FACILITIES SHALL BE INSTALLED PRIOR TO THE FINAL PREPARATION OF SUBGRADE AND PLACEMENT OF BASE MATERIAL. VALVE BOX ELEVATIONS (IF SHOWN) ARE APPROXIMATE ONLY. CONTRACTOR SHALL BE RESPONSIBLE FOR ADJUSTING COVERS TO THE FINAL PAVEMENT GRADE.
31. WHEN REPLACING EXISTING PAVEMENT, THE EXISTING PAVEMENT SHALL BE CUT TO A NEAT LINE AND REMOVED BACK TO AN EXISTING ADEQUATE STRUCTURAL SECTION. AN EXPLORATORY TRENCH OR POTHOLING MAY BE REQUIRED TO DETERMINE THE LIMITS OF PAVEMENT REMOVAL.
32. CONTRACTOR IS RESPONSIBLE FOR FOR MATCHING EXISTING PAVEMENTS AND OTHER IMPROVEMENTS WITH A SMOOTH TRANSITION IN PAVING, CURBS, GUTTERS, GRADING, ETC. AND TO AVOID THE CREATION OF LOW SPOTS, HAZARDOUS CONDITIONS OR ABRUPT OR APPARENT CHANGES IN APPEARANCE, GRADES OR CROSS-SLOPES. CONTRACTOR SHALL CONFORM TO THE REQUIREMENTS OF THE SANTA CRUZ COUNTY ENCROACHMENT PERMIT.
33. IMPROVEMENTS ARE SUBJECT TO INSPECTION AND APPROVAL BY OWNER'S ENGINEER AND THE SWRCB DIVISION OF DRINKING WATER. NOTIFY THE APPLICABLE JURISDICTION(S) AT LEAST 48-HOURS PRIOR TO THE START OF WORK TO ARRANGE FOR INSPECTION.
34. THE PROJECT IS LOCATED IN THE SAND HILLS HABITAT. ALL CONTRACTOR ACTIVIES, TO INCLUDE BUT NOT BE LIMITED TO, STOCKPILING, PARKING, STORAGE, EQUIPMENT SPOTTING, AND CONSTRUCTION ACTIVITES, SHALL BE LIMITED TO EXISTING PAVED AREAS. NO PARKING OF VEHICLES OR EQUIPMENT OFF OF PAVED AREAS WILL BE ALLOWED.
35. CONTRACTOR SHALL PROVIDE STEEL PLATES AND SHALL PLATE ALL OPEN TRENCHS NOT ACTIVELY BEING WORKED ON. ALL OPEN TRENCHES SHALL BE PLATED AT THE END OF EACH WORKING DAY.
36. CONTRACTOR SHALL ENSURE MAINTENANCE OF ALL REQUIRED UTILITY SEPARATION REQUIREMENTS. NOT ALL SEPARATION REQUIREMENTS ARE SHOWN ON THE PLANS, CONTRACTOR TO IDENTIFY AND CONFORM WITH ALL REQUIRED CLEARANCES, SHOWN ON THE PLANS OR NOT.

## GRADING NOTES:

1. ALL GRADING, EROSION CONTROL, SITE PREPARATION AND PLACING AND COMPACTION OF FILL SHALL BE DONE IN ACCORDANCE WITH THE RECOMMENDATIONS CONTAINED IN THE GEOTECHNICAL REPORT ENTITLED "GEOTECHNICAL DESIGN REPORT, SLVWD 2019 WATERLINE PROJECT", PREPARED BY CAL ENGINEERING & GEOLOGY DATED JANUARY 30, 2020. QUESTIONS ABOUT ITEMS THAT ARE NOT CLEAR OR NOT COVERED IN THE REPORT SHALL BE SUBMITTED TO THE GEOTECHNICAL ENGINEER.
2. THE CONTRACTOR SHALL PROVIDE THE CONSTRUCTION STAKES. THE NUMBER AND LOCATION OF STAKES REQUIRED SHALL BE DETERMINED BEFORE THE CONSTRUCTION BEGINS. ALL CONSTRUCTION STAKING SHALL BE DONE BY A REGISTERED CIVIL ENGINEER OR LICENSED LAND SURVEYOR.
3. ALL EXISTING ELEVATIONS SHOWN ARE AS MEASURED IN THE FIELD, UNLESS NOTED OTHERWISE.
4. ALL GRADES SHOWN ARE FINISHED GRADES, UNLESS OTHERWISE NOTED.
5. ALL STATIONING AND DISTANCES INDICATED ON THE DRAWINGS ARE BASED ON HORIZONTAL MEASURED FEET.
6. ALL GRADING, EROSION CONTROL, SITE PREPARATION, AND PLACING AND COMPACTION OF FILL SHALL BE DONE IN ACCORDANCE WITH CHAPTER 16.20 OF THE SANTA CRUZ COUNTY, CA CODE OF ORDINANCES.
7. CONTRACTOR SHALL NOTIFY THE ENGINEER AND THE OWNER AT LEAST TWO WORKING DAYS PRIOR TO THE START OF WORK.
8. CLEAR SURFACE VEGETATION AND STRIP TOPSOIL TO BOTTOM OF ROOT ZONE WITHIN GRADING AREAS. STOCKPILE TOPSOIL ON-SITE FOR FUTURE USE. CHIP AND SPREAD REMOVED VEGETATION WITHIN THE LIMITS OF THE WORK.
9. STRUCTURAL FILL AREAS SHALL BE SCARIFIED TO A DEPTH OF 18-INCHES, MOISTURE CONDITIONED AND COMPACTED.
10. CLEAN NATIVE MATERIAL MEETING THE REQUIREMENTS LISTED IN THE GEOTECHNICAL REPORT MAY BE USED AS STRUCTURAL FILL. IMPORTED STRUCTURAL FILL, IF NEEDED, SHALL MEET THE REQUIREMENTS LISTED IN THE GEOTECHNICAL REPORT.
11. BEDDING FOR UNDERGROUND UTILITIES SHALL BE IMPORTED SAND MATERIAL (MINIMUM S.E. = 30) UNLESS OTHERWISE APPROVED BY THE ENGINEER. BEDDING SHALL BE COMPACTED TO A MINIMUM RELATIVE COMPACTION OF 95% AS BASED UPON ASTM TEST DESIGNATION D1557, MODIFIED PROCTOR.
12. BACKFILL FOR UTILITY TRENCHES UNDER PAVEMENTS SHALL BE 2-SACK CEMENT SLURRY MEETING THE REQUIREMENTS OF THE SANTA CRUZ COUNTY PUBLIC WORKS DEPARTMENT. BACKFILL NOT UNDER PAVEMENT SHALL BE COMPACTED TO A MINIMUM RELATIVE COMPACTION OF 95% BASED UPON ASTM TEST DESIGNATION D1557, MODIFIED PROCTOR.
13. ALL SURPLUS AND UNSUITABLE MATERIAL SHALL BE REMOVED FROM THE SITE AND PROPERLY DISPOSED OF BY CONTRACTOR.
14. CONTRACTOR SHALL NEITHER WASTE NOR DEPOSIT ANY HAZARDOUS MATERIALS ON THE GRADING SURFACES OR WITHIN THE GRADED CUT AND FILL AREAS OF THIS PROJECT, INCLUDING BUT NOT LIMITED TO GASOLINE OR DIESEL FUELS, MOTOR OILS OR TRANSMISSION FLUIDS, ANTIFREEZE, HYDRAULIC FLUIDS, LUBRICANTS, STARTING FLUIDS AND FILTERS, AND/OR CONTAINERS FOR THESE PRODUCTS. HAZARDOUS MATERIAL SPILLS THAT OCCUR AS A RESULT OF EITHER EQUIPMENT FAILURES OR VANDALISM, INCLUDING ALL ADJACENT CONTAMINATED SOILS, SHALL BE EXCAVATED AND PACKAGED FOR DISPOSAL AT AN ENVIRONMENTALLY APPROVED DISPOSAL SITE. MATERIALS SHALL NOT BE TRANSPORTED OFF THE SITE UNTIL THEY ARE CATALOGED AND APPROVED BY THE CONSTRUCTION MANAGER. ALL REMOVAL, PACKAGING, TRANSPORTATION AND DISPOSAL COSTS SHALL BE THE RESPONSIBILITY OF THE CONTRACTOR.
15. ALL DISTURBED AREAS SHALL BE RE-SEEDED WITH THE FOLLOWING EROSION CONTROL MIX. APPLY 1 POUND PER 800 SQUARE FEET. PROVIDE MULCH AND FERTILIZER PER SEED SUPPLIERS RECOMMENDATIONS:

| SPECIES | COMMON NAME |
|---|---|
| FESTUCA RUBRA 'MOLATE' | RED FESCUE |
| POA SECUNDA | SANDBERG BLUEGRASS |
| VULPIA MICROSTACHYS | SMALL FESCUE |
| NASELLA PULCHRA | PURPLE NEEEDLEGRASS |

## PIPELINE NOTES:

1. FULLY RESTRAIN ALL NEW PIPELINES AND FITTINGS.
    1.1. RESTRAIN DUCTILE IRON PIPE USING LOCKING GASKETS (FIELD-LOK OR EQUAL) ON RUN OF PIPE, AND EBAA MEGALUG RESTRAINTS ON MECHANICAL JOINT FITTINGS.
2. PROTECT IN-PLACE EXISTING RESIDENTIAL SERVICES UNTIL THE REPLACEMENT WATER MAIN IS COMPLETED, TESTED AND PLACED INTO SERVICE. REPAIR OR REPLACE DAMAGED SERVICES ON THE SAME DAY THE DAMAGE OCCURS. PROVIDE TEMPORARY HIGH-LINE CONNECTIONS IF CUSTOMER OUTAGES WILL EXCEED 4-HOURS.
3. COORDINATE CUSTOMER WATER SERVICE REPLACEMENTS WITH DISTRICT STAFF:
    3.1. NOTIFY STAFF A MINIMUM OF 2-WEEKS PRIOR TO THE WORK. STAFF WILL DETERMINE IF REPLACEMENT METERS WILL BE PROVIDED.
    3.2. NOTIFY CUSTOMERS USING DOOR HANGERS A MINIMUM OF 48-HOURS PRIOR TO THE OUTAGE.
    3.3. DO NOT DISCONNECT CUSTOMER'S SERVICE UNTIL ALL REQUIRED MATERIALS AND METER ARE ON-SITE.
4. ABANDONMENT OF ASBESTOS-CEMENT (TRANSITE) PIPE
    4.1. ABANDON EXISTING ASBESTOS-CEMENT WATER MAIN AFTER THE REPLACEMENT MAIN IS IN-SERVICE AND ALL CUSTOMER CONNECTIONS HAVE BEEN TRANSFERRED TO THE NEW MAIN.
    4.2. POTHOLE TO EXPOSE EXISTING PIPE.
    4.3. CUT OUT AND REMOVE 2-FT SECTION OF THE EXISTING PIPE AND INSTALL MJ PLUG AT EXISTING FITTING.
    4.4. PLACE GROUT PLUG AROUND THE END OF THE PIPE. GROUT MUST EXTEND 12-INCH MINIMUM INTO THE PIPE AND 4-INCH MINIMUM OUTSIDE THE PIPE.

**UNDERGROUND SERVICE ALERT**
**CALL: TOLL FREE**
**1-800**
**227-2600**
**TWO WORKING DAYS BEFORE YOU DIG**

| REV. NO. | DESCRIPTION | BY | DATE |
|---|---|---|---|
| 1 | | | |
| 2 | | | |
| 3 | | | |
| 4 | | | |
| 5 | | | |


Schaaf & Wheeler
CONSULTING CIVIL ENGINEERS
3 Quail Run Circle, Suite 101
Salinas, CA 93907-2348
(831) 883-4848


REGISTERED PROFESSIONAL ENGINEER
NEBRAS A. STEGBERG
No. 69703
CIVIL
STATE OF CALIFORNIA

GENERAL NOTES

QUAIL HOLLOW ROAD
PIPELINE REPLACEMENT

San Lorenzo Valley WATER DISTRICT

| | | | |
|---|---|---|---|
| DESIGNED BY: | CJM | DATE: | 7/12/2021 |
| DRAWN BY: | CJM | DATE: | 7/12/2021 |
| QC CHECKED BY: | AAS | DATE: | 7/12/2021 |
| PROJECT NO.: | | | |
| SCALE: | NO SCALE | | |
| SUBMITTAL: | 100% SUBMITTAL | | |

G1.2



C:\USERS\JTABUE\DESKTOP\SLVWD QH\QUAIL HOLLOW WORKING\SLVWD_PIPELINES-NOTES.DWG 7/12/2021 BY JTABUE

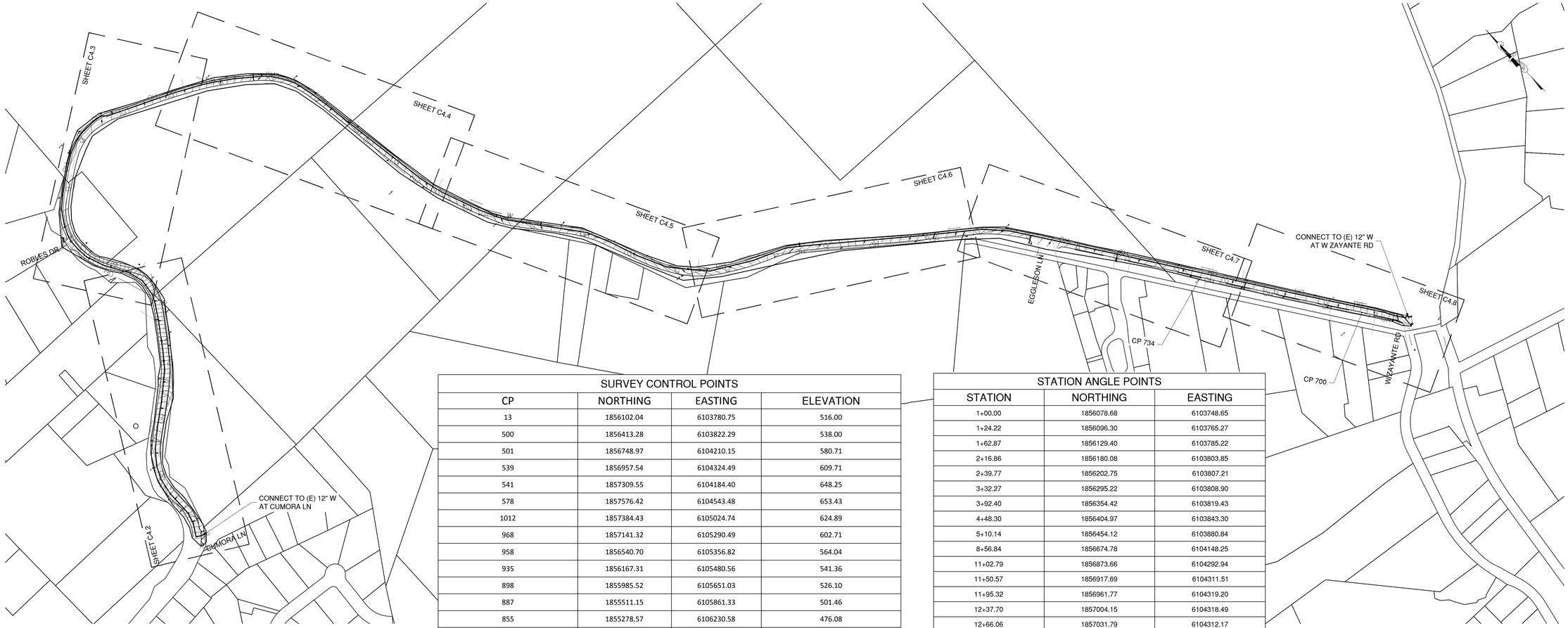


| SURVEY CONTROL POINTS | | | |
|---|---|---|---|
| CP | NORTHING | EASTING | ELEVATION |
| 13 | 1856102.04 | 6103780.75 | 516.00 |
| 500 | 1856413.28 | 6103822.29 | 538.00 |
| 501 | 1856748.97 | 6104210.15 | 580.71 |
| 539 | 1856957.54 | 6104324.49 | 609.71 |
| 541 | 1857309.55 | 6104184.40 | 648.25 |
| 578 | 1857576.42 | 6104543.48 | 653.43 |
| 1012 | 1857384.43 | 6105024.74 | 624.89 |
| 968 | 1857141.32 | 6105290.49 | 602.71 |
| 958 | 1856540.70 | 6105356.82 | 564.04 |
| 935 | 1856167.31 | 6105480.56 | 541.36 |
| 898 | 1855985.52 | 6105651.03 | 526.10 |
| 887 | 1855511.15 | 6105861.33 | 501.46 |
| 855 | 1855278.57 | 6106230.58 | 476.08 |
| 805 | 1854752.76 | 6106917.24 | 430.07 |
| 734 | 1854075.43 | 6107339.35 | 385.88 |
| 700 | 1853529.06 | 6107704.07 | 353.01 |
| 2 | 1853298.37 | 6107903.59 | 341.90 |

| STATION ANGLE POINTS | | |
|---|---|---|
| STATION | NORTHING | EASTING |
| 1+00.00 | 1856078.68 | 6103748.65 |
| 1+24.22 | 1856096.30 | 6103765.27 |
| 1+62.87 | 1856129.40 | 6103785.22 |
| 2+16.86 | 1856180.08 | 6103803.85 |
| 2+39.77 | 1856202.75 | 6103807.21 |
| 3+32.27 | 1856295.22 | 6103808.90 |
| 3+92.40 | 1856354.42 | 6103819.43 |
| 4+48.30 | 1856404.97 | 6103843.30 |
| 5+10.14 | 1856454.12 | 6103880.84 |
| 8+56.84 | 1856674.78 | 6104148.25 |
| 11+02.79 | 1856873.66 | 6104292.94 |
| 11+50.57 | 1856917.69 | 6104311.51 |
| 11+95.32 | 1856961.77 | 6104319.20 |
| 12+37.70 | 1857004.15 | 6104318.49 |
| 12+66.06 | 1857031.79 | 6104312.17 |
| 14+01.75 | 1857144.80 | 6104237.06 |
| 14+65.93 | 1857204.46 | 6104213.40 |
| 15+10.86 | 1857249.06 | 6104207.92 |
| 16+25.79 | 1857360.08 | 6104234.59 |
| 16+86.11 | 1857409.55 | 6104269.11 |
| 17+41.36 | 1857446.07 | 6104310.57 |
| 19+12.50 | 1857543.52 | 6104451.25 |
| 19+73.49 | 1857565.98 | 6104507.96 |
| 19+87.17 | 1857560.75 | 6104520.60 |
| 20+70.87 | 1857562.89 | 6104604.28 |
| 21+26.15 | 1857550.14 | 6104658.06 |
| 25+18.67 | 1857381.60 | 6105012.53 |
| 25+73.90 | 1857352.68 | 6105059.61 |
| 27+94.14 | 1857216.11 | 6105232.40 |
| 28+96.66 | 1857128.19 | 6105285.13 |
| 30+44.67 | 1856983.12 | 6105314.43 |
| 35+26.72 | 1856505.69 | 6105381.11 |
| 36+14.43 | 1856420.75 | 6105402.95 |
| 37+84.95 | 1856260.73 | 6105461.86 |
| 38+97.56 | 1856157.42 | 6105506.67 |
| 42+25.62 | 1855898.43 | 6105708.04 |
| 45+71.81 | 1855576.90 | 6105836.36 |
| 47+46.61 | 1855446.35 | 6105952.59 |
| 49+25.81 | 1855359.32 | 6106109.24 |
| 50+60.29 | 1855304.16 | 6106231.88 |
| 58+45.76 | 1854815.72 | 6106847.03 |
| 59+55.85 | 1854734.80 | 6106921.67 |
| 74+79.46 | 1853468.77 | 6107769.35 |
| 75+19.02 | 1853433.62 | 6107787.50 |
| 75+92.60 | 1853372.46 | 6107828.39 |

HORIZONTAL CONTROL:
AZIMUTH BEARING BETWEEN CONTROL POINTS CP 700 AND CP734 (N34°40'45"E)
CALIFORNIA STATE PLANE, ZONE III

VERTICAL CONTROL:
ELEVATION DATUM IS NAD83

PIPELINE NOTES:
1. ALL NEW WATER MAINS IN THIS AREA SHALL BE DUCTILE IRON PIPE (AWWA C151)
2. PIPE BEDDING AND TRENCH BACKFILL SHALL BE PER SANTA CRUZ COUNTY FIGURE EP-1
3. REPAVE TRENCH AND SET VALVE LIDS PER SANTA CRUZ COUNTY FIGURE EP-1, EP-2 AND EP-5

NOTE: PARCEL BOUNDARIES ARE IMPORTED FROM GIS AND FOR INFORMATION ONLY.
CORNERS ARE NOT FIELD SURVEYED.

## OVERALL PLAN & SHEET INDEX

1 IN = 200 FT

**UNDERGROUND SERVICE ALERT**
**CALL: TOLL FREE**
**1-800**
**227-2600**
**TWO WORKING DAYS BEFORE YOU DIG**

| REV. NO. | DESCRIPTION | BY | DATE |
|---|---|---|---|
| 1 | | | |
| 2 | | | |
| 3 | | | |
| 4 | | | |
| 5 | | | |

Schaaf & Wheeler
CONSULTING CIVIL ENGINEERS
3 Quail Run Circle, Suite 101
Salinas, CA 93907-2348
(831) 883-4848

REGISTERED PROFESSIONAL ENGINEER
NEBOJSA V. STOJKOVIC
No. 69703
CIVIL
STATE OF CALIFORNIA

# QUAIL HOLLOW ROAD OVERALL PLAN

# QUAIL HOLLOW ROAD PIPELINE REPLACEMENT

San Lorenzo Valley WATER DISTRICT

| | | | |
|---|---|---|---|
| DESIGNED BY: | JCT | DATE: | 7/12/2021 |
| DRAWN BY: | JCT | DATE: | 7/12/2021 |
| QC CHECKED BY: | AAS | DATE: | 7/12/2021 |
| PROJECT NO.: | | | |
| SCALE: | AS SHOWN | | |
| SUBMITTAL: | 100% SUBMITTAL | | |

C4.1

SHEET 4 OF 14

C:\USERS\JTABUE\DESKTOP\SLVWD QH\QUAIL HOLLOW WORKING\SLVWD QUAILHOLLOW 12JULY2021.DWG 7/12/2021 BY: JTABUE

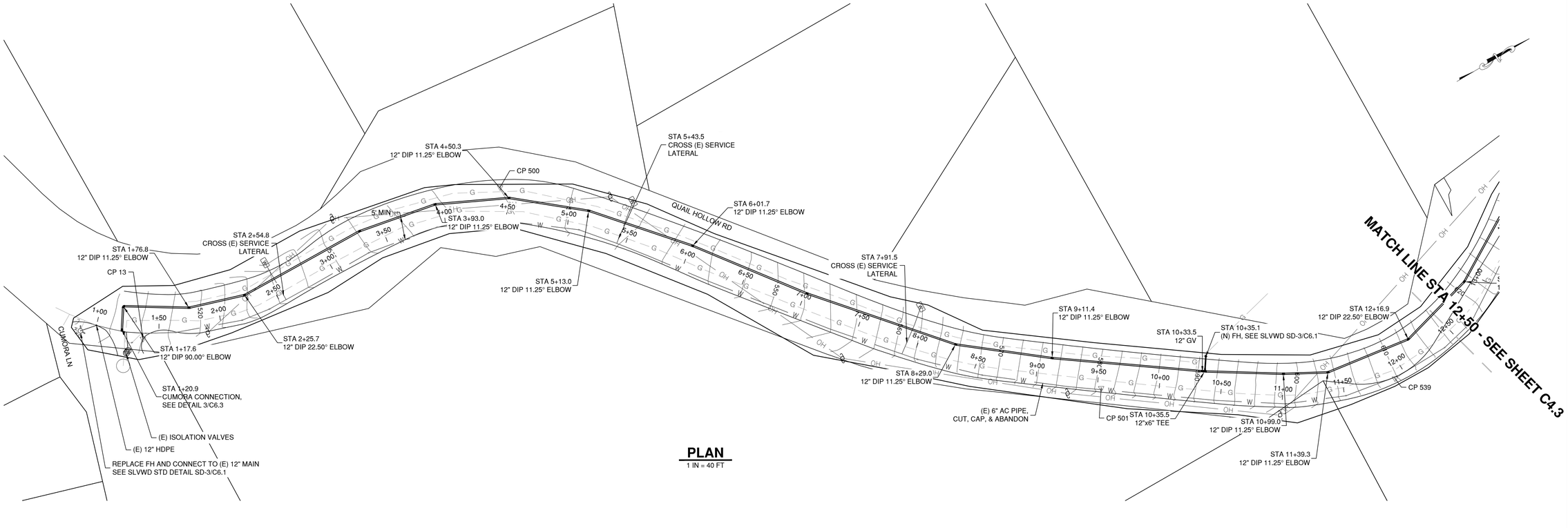


## PLAN

1 IN = 40 FT

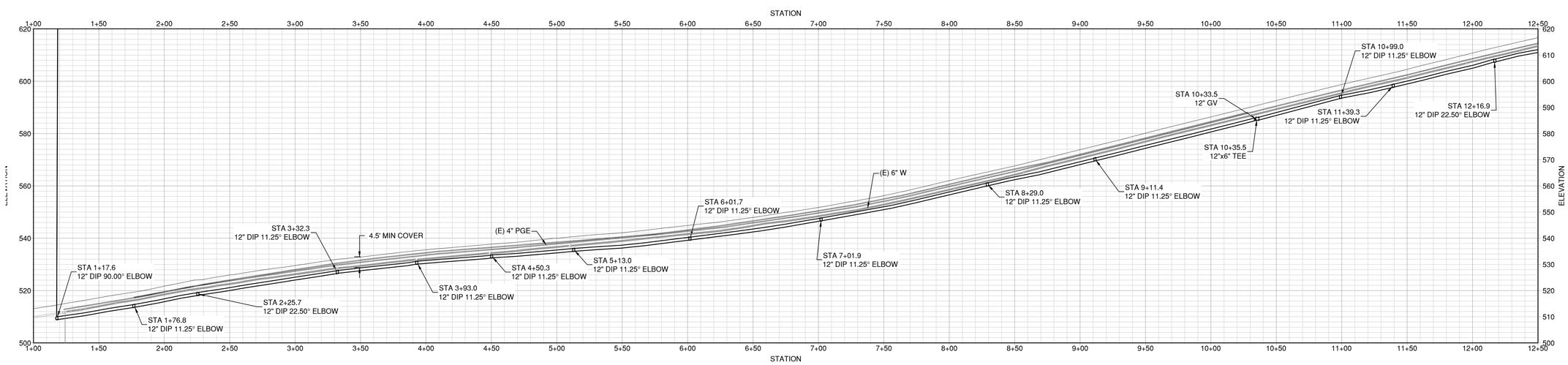


## PROFILE

HOR. SCALE: 1 IN = 40 FT
VER. SCALE: 1 IN = 20 FT

NOTES:

1. ALONG THE ALIGNMENT OF THE NEW WATER MAINS, ALL EXISTING WATER SERVICES, WHETHER OR NOT SHOWN ON THE DRAWINGS, SHALL BE REPLACED. REPLACEMENT SERVICES SHALL EXTEND FROM THE NEW WATER MAIN TO A NEW WATER METER. WATER METERS SHALL BE FURNISHED BY SLVWD AND INSTALLED BY THE CONTRACTOR. ALL OTHER SERVICE COMPONENTS, INCLUDING WATER METER BOX, SHALL BE FURNISHED AND INSTALLED BY THE CONTRACTOR. NEW METER BOXES SHALL BE INSTALLED IN THE SAME LOCATION AS THE EXISTING UNLESS OTHERWISE INDICATED OR OTHERWISE DIRECTED BY SLVWD. NEW SERVICES SHALL BE PER SLVWD STANDARD DETAIL SD-4 OR SD-5. NEW SERVICE PIPING SHALL BE THE SAME SIZE AS THE EXISTING SERVICE PIPING EXCEPT IF THE EXISTING SERVICE PIPING IS LESS THAN 1-INCH DIAMETER. IF THE EXISTING SERVICE PIPING IS LESS THAN 1-INCH DIAMETER, NEW SERVICE PIPING SHALL BE 1-INCH DIAMETER.
2. PARCEL BOUNDARIES ARE IMPORTED FROM GIS AND FOR INFORMATION ONLY. CORNERS ARE NOT FIELD SURVEYED.
3. LOCATION OF GAS MAIN IS APPROXIMATE. PROVIDE A MIN. 5 FT SEPARATION.

0 40 80 Feet

**UNDERGROUND SERVICE ALERT**
**CALL: TOLL FREE**
**1-800**
**227-2600**
TWO WORKING DAYS BEFORE YOU DIG

| REV. NO. | DESCRIPTION | BY | DATE |
|---|---|---|---|
| 1 | | | |
| 2 | | | |
| 3 | | | |
| 4 | | | |
| 5 | | | |


Schaaf & Wheeler
CONSULTING CIVIL ENGINEERS
3 Quail Run Circle, Suite 101
Salinas, CA 93907-2348
(831) 883-4848


REGISTERED PROFESSIONAL ENGINEER
NEBRAY A. STEGBERG
No. 69703
CIVIL
STATE OF CALIFORNIA

**PLAN & PROFILE I**

**QUAIL HOLLOW ROAD PIPELINE REPLACEMENT**

San Lorenzo Valley WATER DISTRICT

| | | | |
|---|---|---|---|
| DESIGNED BY: | JCT | DATE: | 7/12/2021 |
| DRAWN BY: | JCT | DATE: | 7/12/2021 |
| QC CHECKED BY: | AAS | DATE: | 7/12/2021 |
| PROJECT NO.: | | | |
| SCALE: | AS SHOWN | | |
| SUBMITTAL: | 100% SUBMITTAL | | |

C4.2

SHEET 5 OF 14

C:\USERS\JTABUE\DESKTOP\SLVWD QH\QUAIL HOLLOW WORKING\SLVWD QUAIL HOLLOW 12JULY2021.DWG 7/12/2021 BY JTABUE

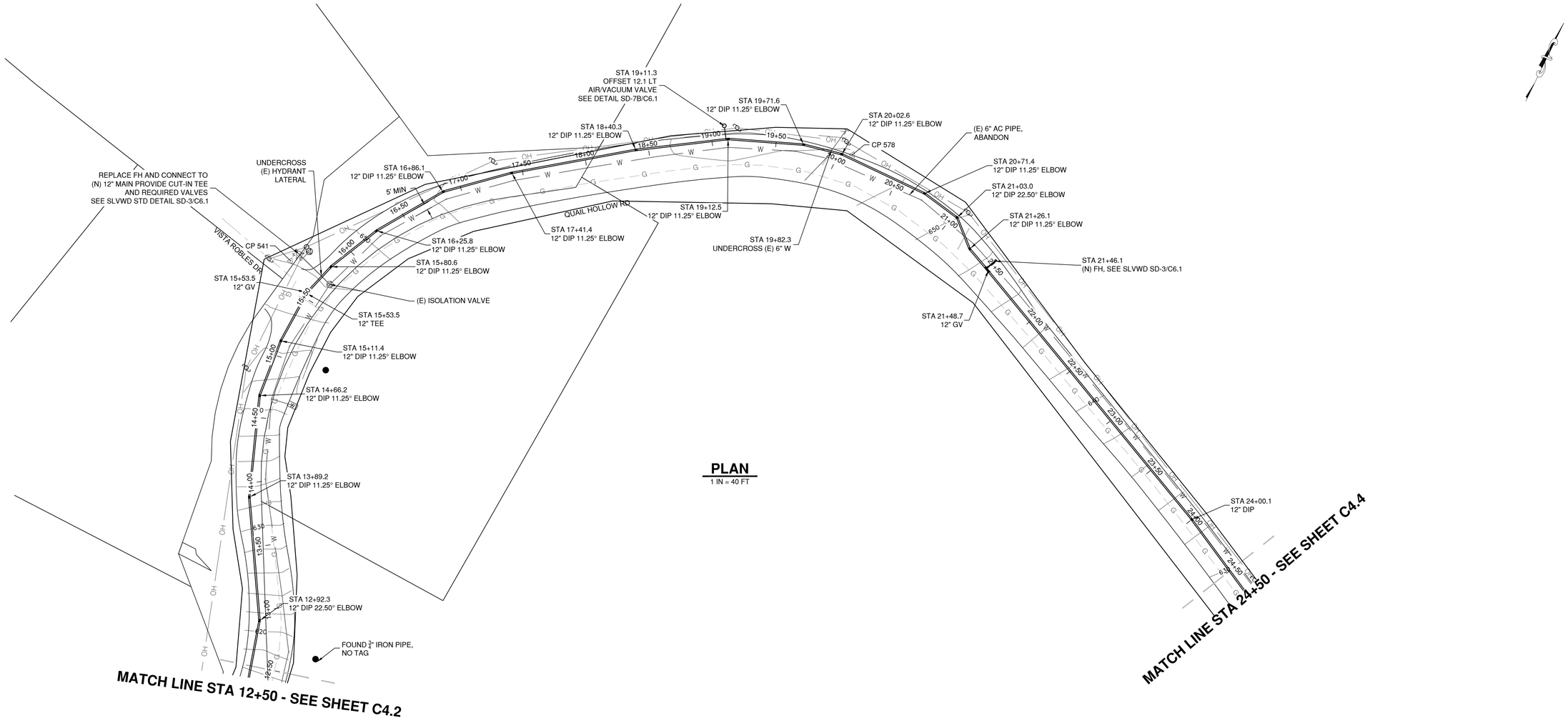


**PLAN**
1 IN = 40 FT

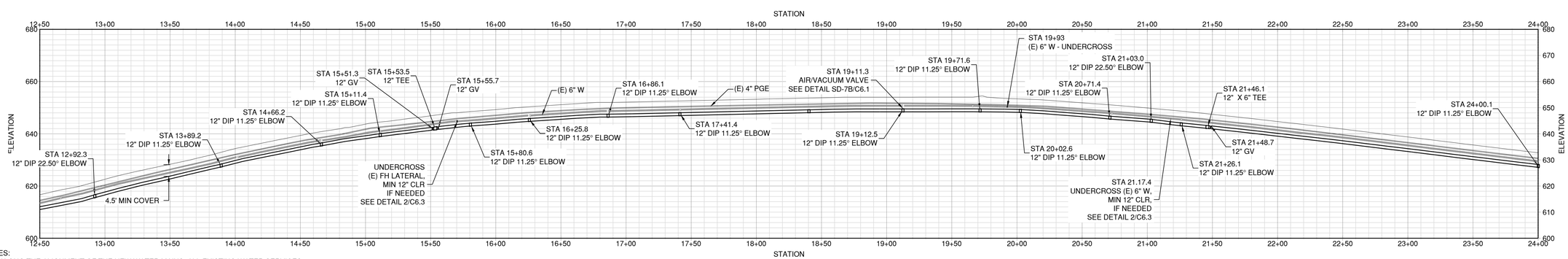


**PROFILE**
HOR. SCALE: 1 IN = 40 FT
VER. SCALE: 1 IN = 20 FT

NOTES:
1. ALONG THE ALIGNMENT OF THE NEW WATER MAINS, ALL EXISTING WATER SERVICES, WHETHER OR NOT SHOWN ON THE DRAWINGS, SHALL BE REPLACED. REPLACEMENT SERVICES SHALL EXTEND FROM THE NEW WATER MAIN TO A NEW WATER METER. WATER METERS SHALL BE FURNISHED BY SLVWD AND INSTALLED BY THE CONTRACTOR. ALL OTHER SERVICE COMPONENTS, INCLUDING WATER METER BOX, SHALL BE FURNISHED AND INSTALLED BY THE CONTRACTOR. NEW METER BOXES SHALL BE INSTALLED IN THE SAME LOCATION AS THE EXISTING UNLESS OTHERWISE INDICATED OR OTHERWISE DIRECTED BY SLVWD. NEW SERVICES SHALL BE PER SLVWD STANDARD DETAIL SD-4 OR SD-5. NEW SERVICE PIPING SHALL BE THE SAME SIZE AS THE EXISTING SERVICE PIPING EXCEPT IF THE EXISTING SERVICE PIPING IS LESS THAN 1-INCH DIAMETER. IF THE EXISTING SERVICE PIPING IS LESS THAN 1-INCH DIAMETER, NEW SERVICE PIPING SHALL BE 1-INCH DIAMETER.
2. PARCEL BOUNDARIES ARE IMPORTED FROM GIS AND FOR INFORMATION ONLY. CORNERS ARE NOT FIELD SURVEYED.
3. LOCATION OF GAS MAIN IS APPROXIMATE. PROVIDE A MIN. 5 FT SEPARATION.

0 40 80 Feet

**UNDERGROUND SERVICE ALERT**
**CALL: TOLL FREE**
**1-800**
**227-2600**
**TWO WORKING DAYS BEFORE YOU DIG**

| REV. NO. | DESCRIPTION | BY | DATE |
|---|---|---|---|
| 1 | | | |
| 2 | | | |
| 3 | | | |
| 4 | | | |
| 5 | | | |


Schaaf & Wheeler
CONSULTING CIVIL ENGINEERS
3 Quail Run Circle, Suite 101
Salinas, CA 93907-2348
(831) 883-4848


REGISTERED PROFESSIONAL ENGINEER
ANDREW J. STOBBENZ
No. 69703
CIVIL
STATE OF CALIFORNIA

**PLAN & PROFILE II**

**QUAIL HOLLOW ROAD PIPELINE REPLACEMENT**

San Lorenzo Valley WATER DISTRICT

| | | | |
|---|---|---|---|
| DESIGNED BY: | JCT | DATE: | 7/12/2021 |
| DRAWN BY: | JCT | DATE: | 7/12/2021 |
| QC CHECKED BY: | AAS | DATE: | 7/12/2021 |
| PROJECT NO.: | | | |
| SCALE: | AS SHOWN | | |
| SUBMITTAL: | 100% SUBMITTAL | | |

C4.3

SHEET 6 OF 14

C:\USERS\JTABUE\DESKTOP\SLVWD QH\QUAIL HOLLOW WORKING\SLVWD QUAILHOLLOW 12JUL2021.DWG 7/12/2021 BY JTABUE

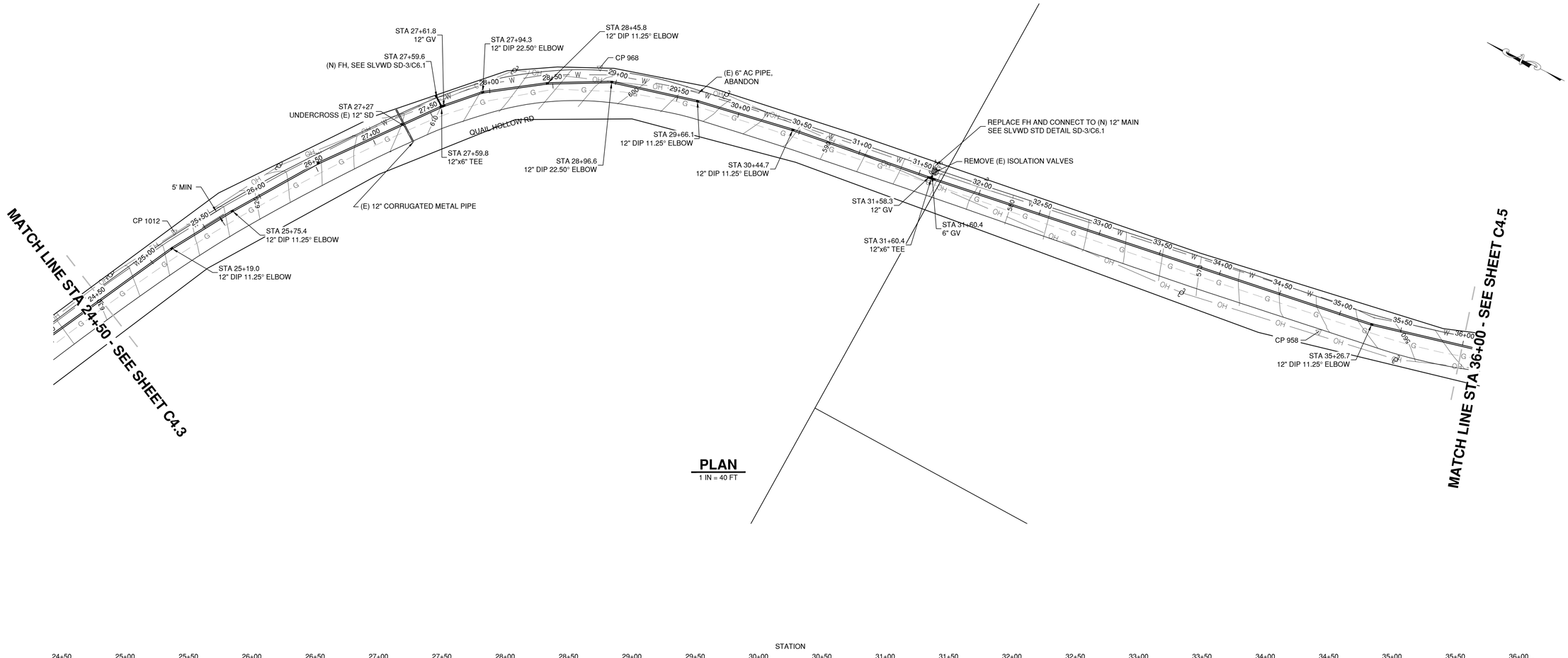


## PLAN

1 IN = 40 FT

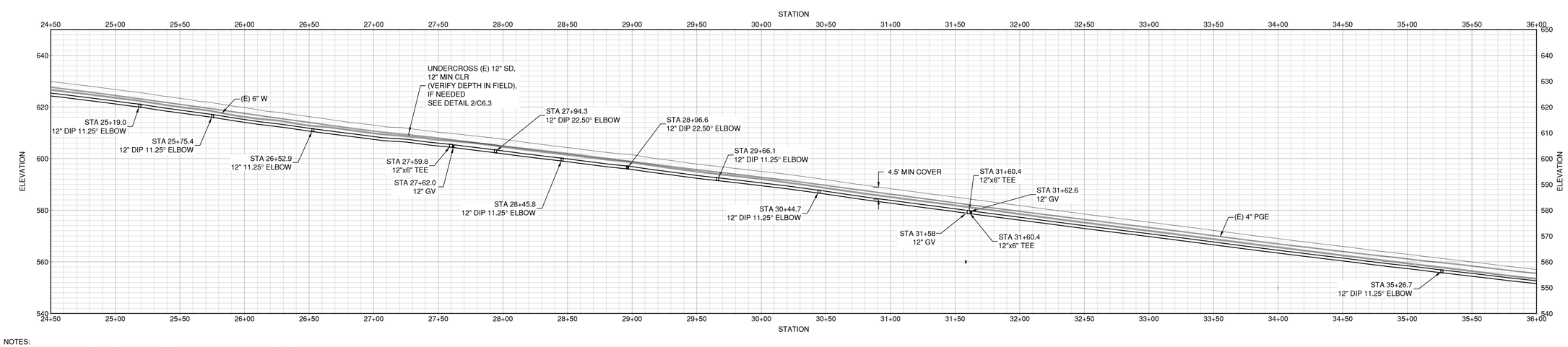


## PROFILE

HOR. SCALE: 1 IN = 40 FT
VER. SCALE: 1 IN = 20 FT

NOTES:

1. ALONG THE ALIGNMENT OF THE NEW WATER MAINS, ALL EXISTING WATER SERVICES, WHETHER OR NOT SHOWN ON THE DRAWINGS, SHALL BE REPLACED. REPLACEMENT SERVICES SHALL EXTEND FROM THE NEW WATER MAIN TO A NEW WATER METER. WATER METERS SHALL BE FURNISHED BY SLVWD AND INSTALLED BY THE CONTRACTOR. ALL OTHER SERVICE COMPONENTS, INCLUDING WATER METER BOX, SHALL BE FURNISHED AND INSTALLED BY THE CONTRACTOR. NEW METER BOXES SHALL BE INSTALLED IN THE SAME LOCATION AS THE EXISTING UNLESS OTHERWISE INDICATED OR OTHERWISE DIRECTED BY SLVWD. NEW SERVICES SHALL BE PER SLVWD STANDARD DETAIL SD-4 OR SD-5. NEW SERVICE PIPING SHALL BE THE SAME SIZE AS THE EXISTING SERVICE PIPING EXCEPT IF THE EXISTING SERVICE PIPING IS LESS THAN 1-INCH DIAMETER. IF THE EXISTING SERVICE PIPING IS LESS THAN 1-INCH DIAMETER, NEW SERVICE PIPING SHALL BE 1-INCH DIAMETER.
2. PARCEL BOUNDARIES ARE IMPORTED FROM GIS AND FOR INFORMATION ONLY. CORNERS ARE NOT FIELD SURVEYED.
3. LOCATION OF GAS MAIN IS APPROXIMATE. PROVIDE A MIN. 5 FT SEPARATION.

0 40 80 Feet

**UNDERGROUND SERVICE ALERT**
**CALL: TOLL FREE**
**1-800**
**227-2600**
TWO WORKING DAYS BEFORE YOU DIG

| REV. NO. | DESCRIPTION | BY | DATE |
|---|---|---|---|
| 1 | | | |
| 2 | | | |
| 3 | | | |
| 4 | | | |
| 5 | | | |


Schaaf & Wheeler
CONSULTING CIVIL ENGINEERS
3 Quail Run Circle, Suite 101
Salinas, CA 93907-2348
(831) 883-4848


REGISTERED PROFESSIONAL ENGINEER
ANDREW J. STOBERNAY
No. 69703
CIVIL
STATE OF CALIFORNIA

**PLAN & PROFILE III**

**QUAIL HOLLOW ROAD PIPELINE REPLACEMENT**

San Lorenzo Valley WATER DISTRICT

| | | |
|---|---|---|
| DESIGNED BY: | JCT | DATE: 7/12/2021 |
| DRAWN BY: | JCT | DATE: 7/12/2021 |
| QC CHECKED BY: | AAS | DATE: 7/12/2021 |
| PROJECT NO.: | | |
| SCALE: | AS SHOWN | |
| SUBMITTAL: | 100% SUBMITTAL | |

C4.4

SHEET 7 OF 14

C:\USERS\JTABUE\DESKTOP\SLVWD QH\QUAIL HOLLOW WORKING\SLVWD QUAILHOLLOW 12JUL\72021.DWG 7/12/2021 BY: JTABUE

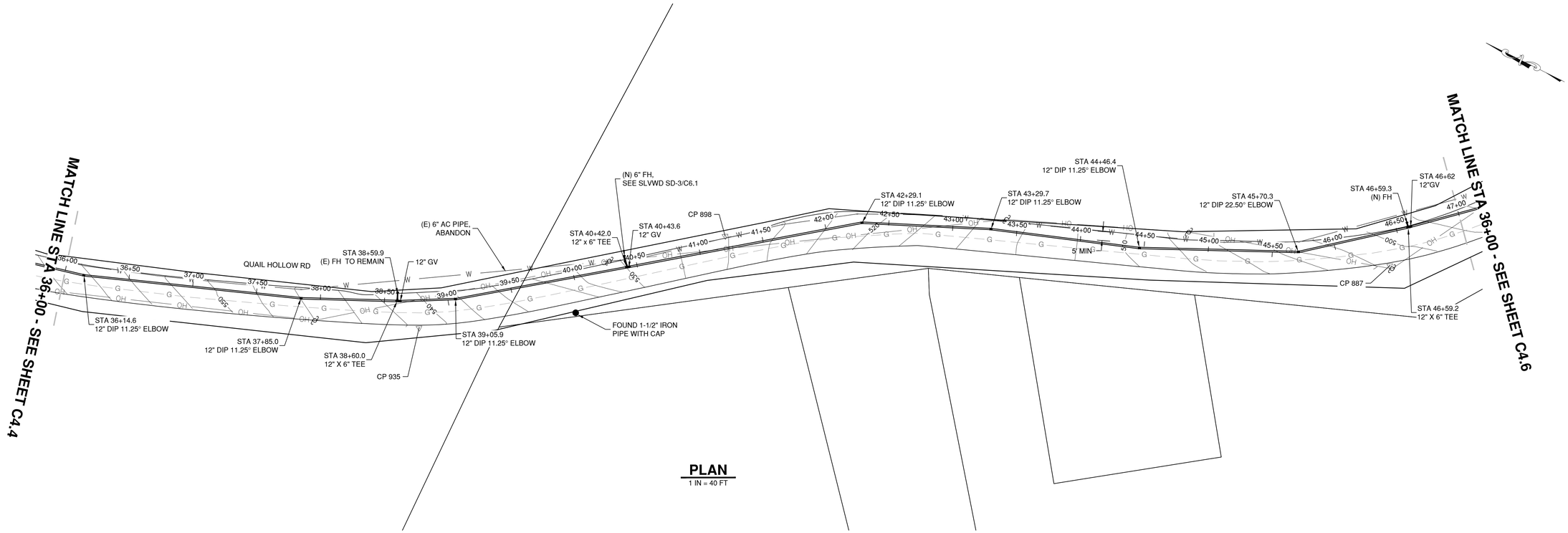


## PLAN

1 IN = 40 FT

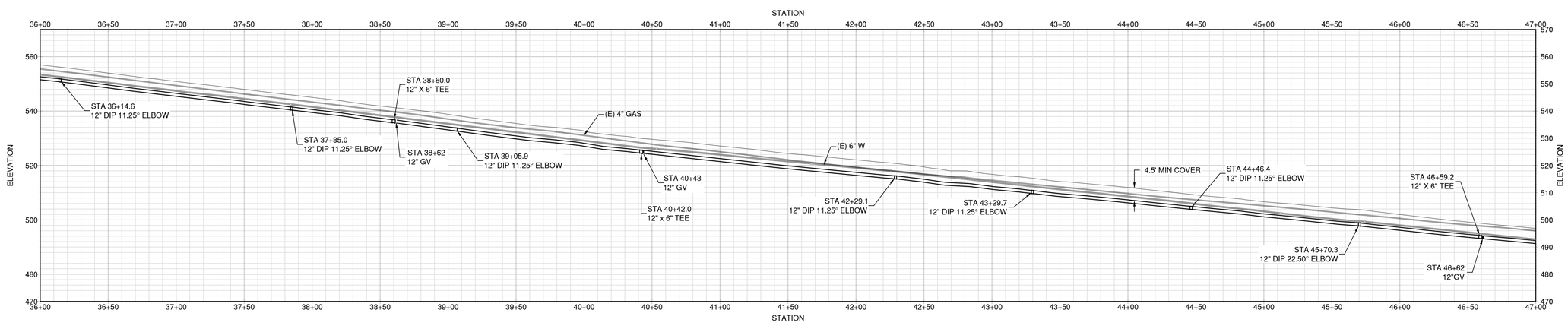


## PROFILE

HOR. SCALE: 1 IN = 40 FT
VER. SCALE: 1 IN = 20 FT

NOTES:

1. ALONG THE ALIGNMENT OF THE NEW WATER MAINS, ALL EXISTING WATER SERVICES, WHETHER OR NOT SHOWN ON THE DRAWINGS, SHALL BE REPLACED. REPLACEMENT SERVICES SHALL EXTEND FROM THE NEW WATER MAIN TO A NEW WATER METER. WATER METERS SHALL BE FURNISHED BY SLVWD AND INSTALLED BY THE CONTRACTOR. ALL OTHER SERVICE COMPONENTS, INCLUDING WATER METER BOX, SHALL BE FURNISHED AND INSTALLED BY THE CONTRACTOR. NEW METER BOXES SHALL BE INSTALLED IN THE SAME LOCATION AS THE EXISTING UNLESS OTHERWISE INDICATED OR OTHERWISE DIRECTED BY SLVWD. NEW SERVICES SHALL BE PER SLVWD STANDARD DETAIL SD-4 OR SD-5. NEW SERVICE PIPING SHALL BE THE SAME SIZE AS THE EXISTING SERVICE PIPING EXCEPT IF THE EXISTING SERVICE PIPING IS LESS THAN 1-INCH DIAMETER. IF THE EXISTING SERVICE PIPING IS LESS THAN 1-INCH DIAMETER, NEW SERVICE PIPING SHALL BE 1-INCH DIAMETER.
2. PARCEL BOUNDARIES ARE IMPORTED FROM GIS AND FOR INFORMATION ONLY. CORNERS ARE NOT FIELD SURVEYED.
3. LOCATION OF GAS MAIN IS APPROXIMATE. PROVIDE A MIN. 5 FT SEPARATION.

0 40 80 Feet

**UNDERGROUND SERVICE ALERT**
**CALL: TOLL FREE**
**1-800**
**227-2600**
TWO WORKING DAYS BEFORE YOU DIG

| REV. NO. | DESCRIPTION | BY | DATE |
|---|---|---|---|
| 1 | | | |
| 2 | | | |
| 3 | | | |
| 4 | | | |
| 5 | | | |


Schaaf & Wheeler
CONSULTING CIVIL ENGINEERS
3 Quail Run Circle, Suite 101
Salinas, CA 93907-2348
(831) 883-4848


REGISTERED PROFESSIONAL ENGINEER ANDREW J. STEGBERG No. 69703 CIVIL STATE OF CALIFORNIA

**PLAN & PROFILE IV**

**QUAIL HOLLOW ROAD PIPELINE REPLACEMENT**

San Lorenzo Valley WATER DISTRICT

| | | |
|---|---|---|
| DESIGNED BY: | JCT | DATE: 7/12/2021 |
| DRAWN BY: | JCT | DATE: 7/12/2021 |
| QC CHECKED BY: | AAS | DATE: 7/12/2021 |
| PROJECT NO.: | | |
| SCALE: | AS SHOWN | |
| SUBMITTAL: | 100% SUBMITTAL | |

C4.5

SHEET 8 OF 14

C:\USERS\JTABUE\DESKTOP\SLVWD QH\QUAIL HOLLOW WORKING\SLVWD QUAILHOLLOW 12JUL\72021.DWG 7/12/2021 BY JTABUE

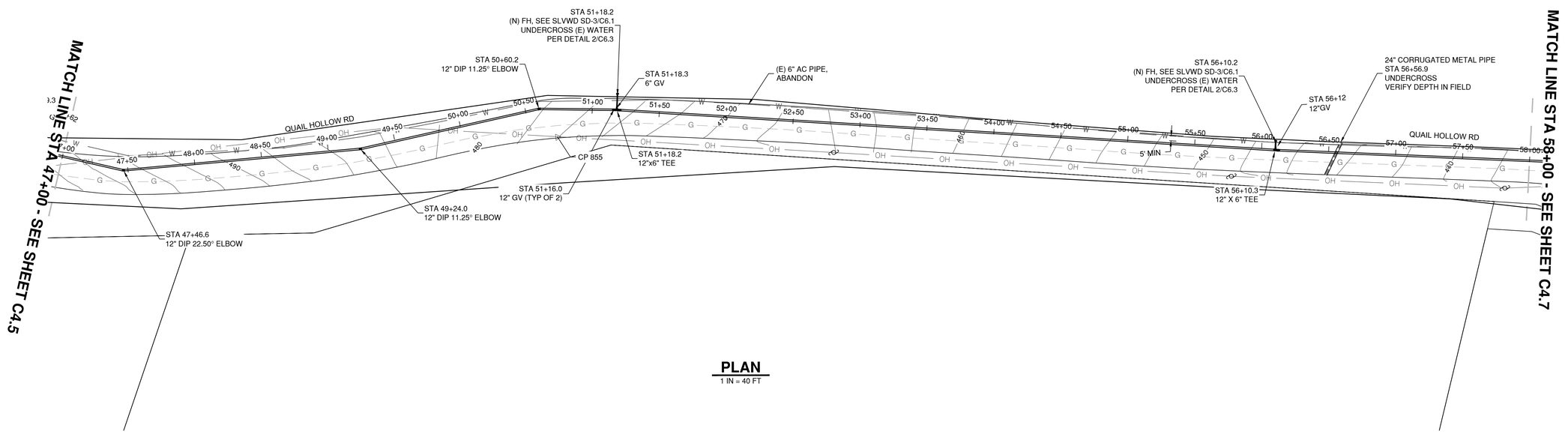


**PLAN**
1 IN = 40 FT

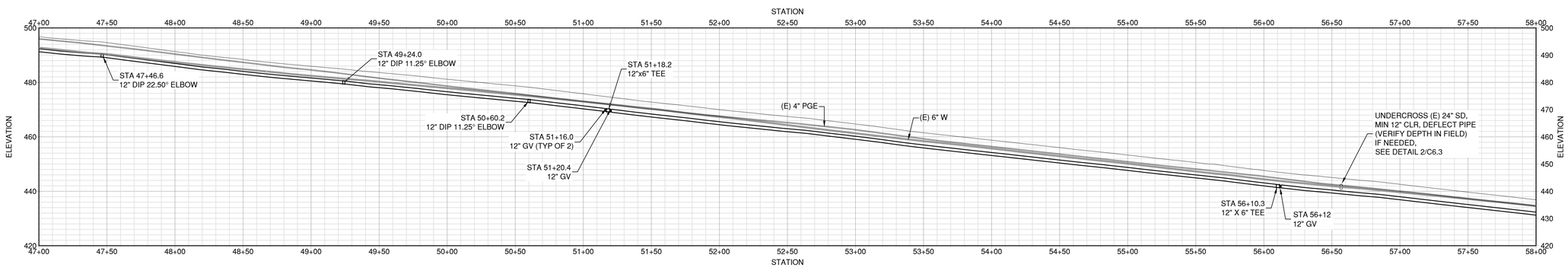


**PROFILE**
HOR. SCALE: 1 IN = 40 FT
VER. SCALE: 1 IN = 20 FT

NOTES:
1. ALONG THE ALIGNMENT OF THE NEW WATER MAINS, ALL EXISTING WATER SERVICES, WHETHER OR NOT SHOWN ON THE DRAWINGS, SHALL BE REPLACED. REPLACEMENT SERVICES SHALL EXTEND FROM THE NEW WATER MAIN TO A NEW WATER METER. WATER METERS SHALL BE FURNISHED BY SLVWD AND INSTALLED BY THE CONTRACTOR. ALL OTHER SERVICE COMPONENTS, INCLUDING WATER METER BOX, SHALL BE FURNISHED AND INSTALLED BY THE CONTRACTOR. NEW METER BOXES SHALL BE INSTALLED IN THE SAME LOCATION AS THE EXISTING UNLESS OTHERWISE INDICATED OR OTHERWISE DIRECTED BY SLVWD. NEW SERVICES SHALL BE PER SLVWD STANDARD DETAIL SD-4 OR SD-5. NEW SERVICE PIPING SHALL BE THE SAME SIZE AS THE EXISTING SERVICE PIPING EXCEPT IF THE EXISTING SERVICE PIPING IS LESS THAN 1-INCH DIAMETER. IF THE EXISTING SERVICE PIPING IS LESS THAN 1-INCH DIAMETER, NEW SERVICE PIPING SHALL BE 1-INCH DIAMETER.
2. PARCEL BOUNDARIES ARE IMPORTED FROM GIS AND FOR INFORMATION ONLY. CORNERS ARE NOT FIELD SURVEYED.
3. LOCATION OF GAS MAIN IS APPROXIMATE. PROVIDE A MIN. 5 FT SEPARATION.

0 40 80 Feet

**UNDERGROUND SERVICE ALERT**
**CALL: TOLL FREE**
**1-800**
**227-2600**
**TWO WORKING DAYS BEFORE YOU DIG**

| REV. NO. | DESCRIPTION | BY | DATE |
|---|---|---|---|
| 1 | | | |
| 2 | | | |
| 3 | | | |
| 4 | | | |
| 5 | | | |


Schaaf & Wheeler
CONSULTING CIVIL ENGINEERS
3 Quail Run Circle, Suite 101
Salinas, CA 93907-2348
(831) 883-4848


REGISTERED PROFESSIONAL ENGINEER
NEREIDA V. STEREBENZ
No. 69703
CIVIL
STATE OF CALIFORNIA

**PLAN & PROFILE V**

**QUAIL HOLLOW ROAD PIPELINE REPLACEMENT**

San Lorenzo Valley WATER DISTRICT

| | | | |
|---|---|---|---|
| DESIGNED BY: | JCT | DATE: | 7/12/2021 |
| DRAWN BY: | JCT | DATE: | 7/12/2021 |
| QC CHECKED BY: | AAS | DATE: | 7/12/2021 |
| PROJECT NO.: | | | |
| SCALE: | AS SHOWN | | |
| SUBMITTAL: | 100% SUBMITTAL | | |

C4.6



C:\USERS\JTABUE\DESKTOP\SLVWD GH\QUAIL HOLLOW WORKING\SLVWD QUAILHOLLOW 12JULY2021.DWG 7/12/2021 BY JTABUE

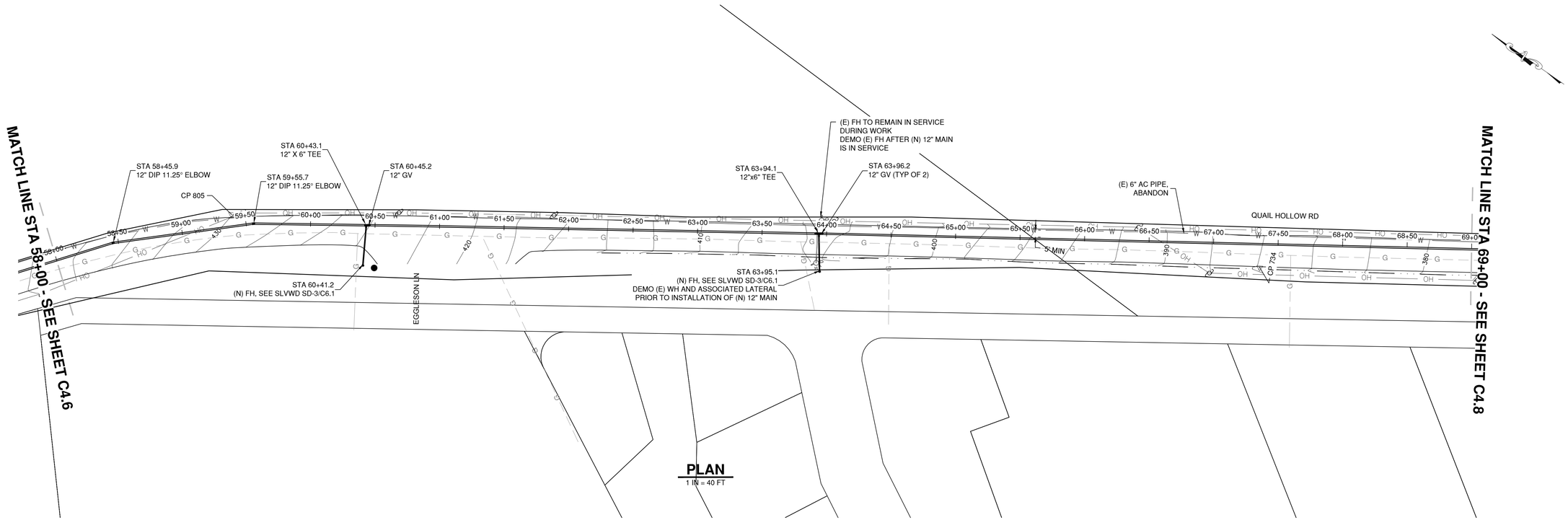


## PLAN

1 IN = 40 FT

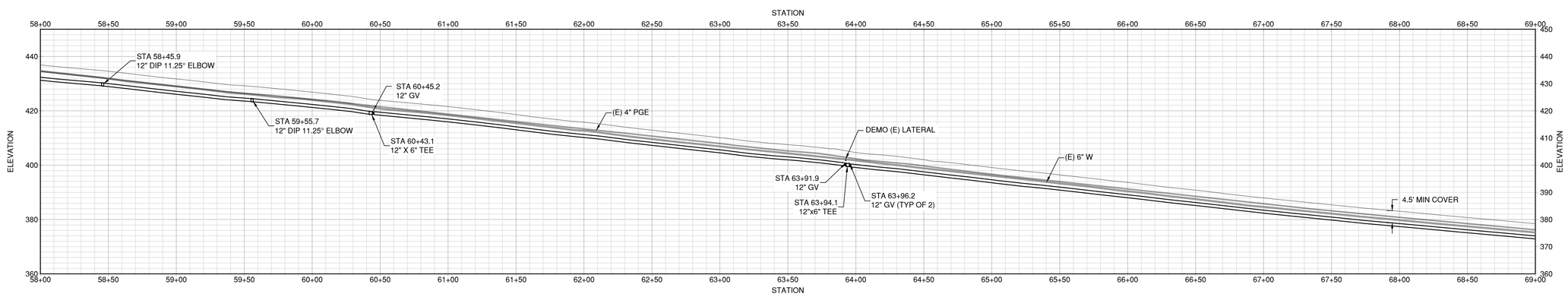


## PROFILE

HOR. SCALE: 1 IN = 40 FT
VER. SCALE: 1 IN = 20 FT

NOTES:

1. ALONG THE ALIGNMENT OF THE NEW WATER MAINS, ALL EXISTING WATER SERVICES, WHETHER OR NOT SHOWN ON THE DRAWINGS, SHALL BE REPLACED. REPLACEMENT SERVICES SHALL EXTEND FROM THE NEW WATER MAIN TO A NEW WATER METER. WATER METERS SHALL BE FURNISHED BY SLVWD AND INSTALLED BY THE CONTRACTOR. ALL OTHER SERVICE COMPONENTS, INCLUDING WATER METER BOX, SHALL BE FURNISHED AND INSTALLED BY THE CONTRACTOR. NEW METER BOXES SHALL BE INSTALLED IN THE SAME LOCATION AS THE EXISTING UNLESS OTHERWISE INDICATED OR OTHERWISE DIRECTED BY SLVWD. NEW SERVICES SHALL BE PER SLVWD STANDARD DETAIL SD-4 OR SD-5. NEW SERVICE PIPING SHALL BE THE SAME SIZE AS THE EXISTING SERVICE PIPING EXCEPT IF THE EXISTING SERVICE PIPING IS LESS THAN 1-INCH DIAMETER. IF THE EXISTING SERVICE PIPING IS LESS THAN 1-INCH DIAMETER, NEW SERVICE PIPING SHALL BE 1-INCH DIAMETER.
2. PARCEL BOUNDARIES ARE IMPORTED FROM GIS AND FOR INFORMATION ONLY. CORNERS ARE NOT FIELD SURVEYED.
3. LOCATION OF GAS MAIN IS APPROXIMATE. PROVIDE A MIN. 5 FT SEPARATION.

0 40 80 Feet

**UNDERGROUND SERVICE ALERT**
**CALL: TOLL FREE**
**1-800**
**227-2600**
**TWO WORKING DAYS BEFORE YOU DIG**

| REV. NO. | DESCRIPTION | BY | DATE |
|---|---|---|---|
| 1 | | | |
| 2 | | | |
| 3 | | | |
| 4 | | | |
| 5 | | | |


Schaaf & Wheeler
CONSULTING CIVIL ENGINEERS
3 Quail Run Circle, Suite 101
Salinas, CA 93907-2348
(831) 883-4848


REGISTERED PROFESSIONAL ENGINEER NEREIDA V. STOBBE-NZ No. 69703 CIVIL STATE OF CALIFORNIA

**PLAN & PROFILE VI**

**QUAIL HOLLOW ROAD PIPELINE REPLACEMENT**

San Lorenzo Valley WATER DISTRICT

| | | |
|---|---|---|
| DESIGNED BY: | JCT | DATE: 7/12/2021 |
| DRAWN BY: | JCT | DATE: 7/12/2021 |
| QC CHECKED BY: | AAS | DATE: 7/12/2021 |
| PROJECT NO.: | | |
| SCALE: | AS SHOWN | |
| SUBMITTAL: | 100% SUBMITTAL | |

C4.7

SHEET 10 OF 14

C:\USERS\JTABUE\DESKTOP\SLVWD QH\QUAIL HOLLOW WORKING\SLVWD QUAIL HOLLOW 12JULY2021.DWG 7/12/2021 BY JTABUE

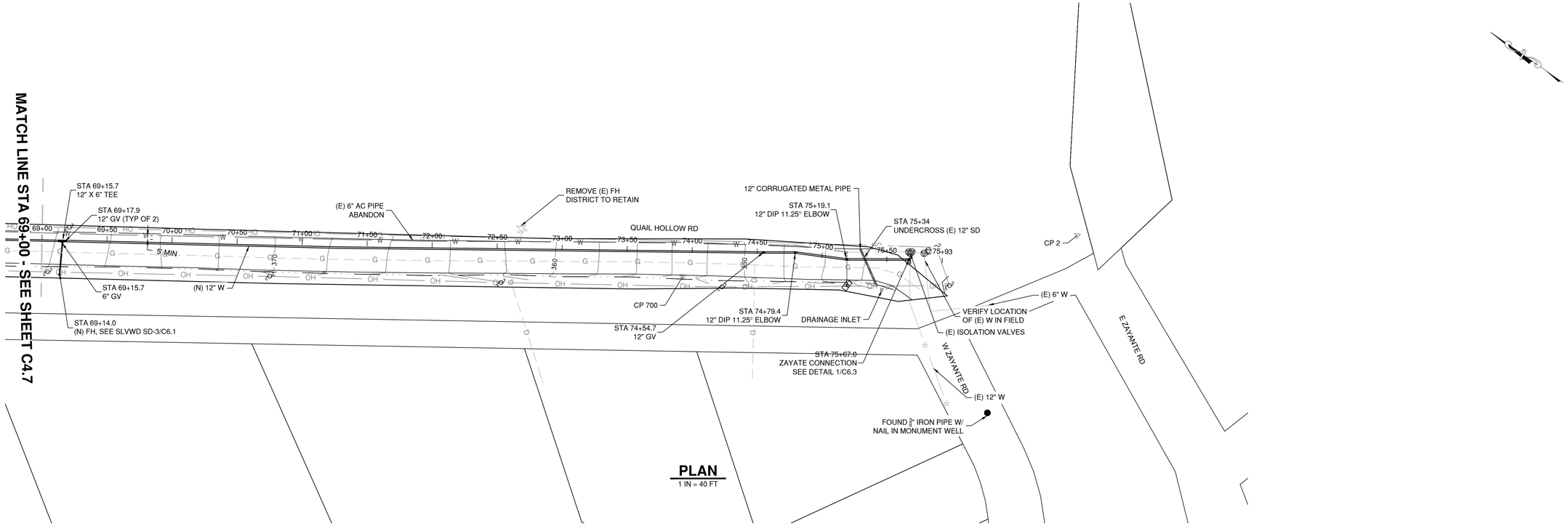


**PLAN**
1 IN = 40 FT

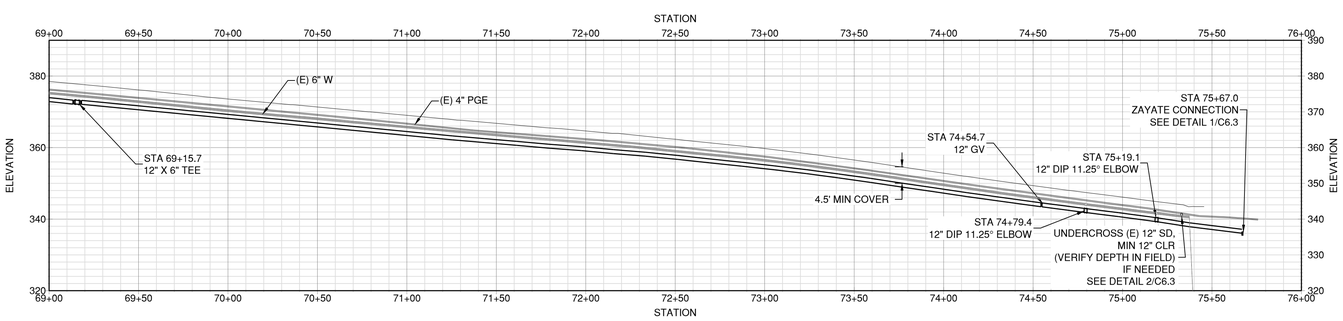


**PROFILE**
HOR. SCALE: 1 IN = 40 FT
VER. SCALE: 1 IN = 20 FT

NOTES:
1. ALONG THE ALIGNMENT OF THE NEW WATER MAINS, ALL EXISTING WATER SERVICES, WHETHER OR NOT SHOWN ON THE DRAWINGS, SHALL BE REPLACED. REPLACEMENT SERVICES SHALL EXTEND FROM THE NEW WATER MAIN TO A NEW WATER METER. WATER METERS SHALL BE FURNISHED BY SLVWD AND INSTALLED BY THE CONTRACTOR. ALL OTHER SERVICE COMPONENTS, INCLUDING WATER METER BOX, SHALL BE FURNISHED AND INSTALLED BY THE CONTRACTOR. NEW METER BOXES SHALL BE INSTALLED IN THE SAME LOCATION AS THE EXISTING UNLESS OTHERWISE INDICATED OR OTHERWISE DIRECTED BY SLVWD. NEW SERVICES SHALL BE PER SLVWD STANDARD DETAIL SD-4 OR SD-5. NEW SERVICE PIPING SHALL BE THE SAME SIZE AS THE EXISTING SERVICE PIPING EXCEPT IF THE EXISTING SERVICE PIPING IS LESS THAN 1-INCH DIAMETER. IF THE EXISTING SERVICE PIPING IS LESS THAN 1-INCH DIAMETER, NEW SERVICE PIPING SHALL BE 1-INCH DIAMETER.
2. PARCEL BOUNDARIES ARE IMPORTED FROM GIS AND FOR INFORMATION ONLY. CORNERS ARE NOT FIELD SURVEYED.
3. LOCATION OF GAS MAIN IS APPROXIMATE. PROVIDE A MIN. 5 FT SEPARATION.

0 40 80 Feet

**UNDERGROUND SERVICE ALERT**
**CALL: TOLL FREE**
**1-800**
**227-2600**
**TWO WORKING DAYS BEFORE YOU DIG**

| REV. NO. | DESCRIPTION | BY | DATE |
|---|---|---|---|
| 1 | | | |
| 2 | | | |
| 3 | | | |
| 4 | | | |
| 5 | | | |


Schaaf & Wheeler
CONSULTING CIVIL ENGINEERS
3 Quail Run Circle, Suite 101
Salinas, CA 93907-2348
(831) 883-4848


REGISTERED PROFESSIONAL ENGINEER
NEREIDA A. STOBBE-NZ
No. 69703
CIVIL
STATE OF CALIFORNIA

**PLAN & PROFILE VII**

**QUAIL HOLLOW ROAD PIPELINE REPLACEMENT**

San Lorenzo Valley WATER DISTRICT

| | | | |
|---|---|---|---|
| DESIGNED BY: | JCT | DATE: | 7/12/2021 |
| DRAWN BY: | JCT | DATE: | 7/12/2021 |
| QC CHECKED BY: | AAS | DATE: | 7/12/2021 |
| PROJECT NO.: | | | |
| SCALE: | AS SHOWN | | |
| SUBMITTAL: | 100% SUBMITTAL | | |

C4.8
SHEET 11 OF 14

C:\USERS\JTABUE\DESKTOP\SLVWD QH\QUAIL HOLLOW WORKING\SLVWD QUAILHOLLOW 12JULY2021.DWG 7/12/2021 BY JTABUE

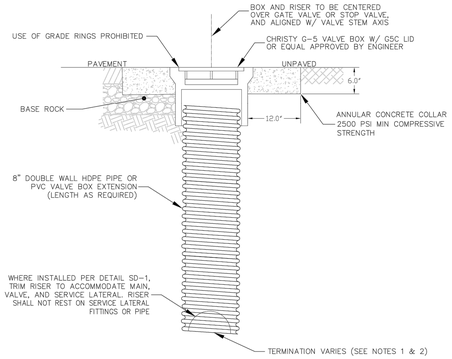


NOTES:

1. RISER TERMINATION FOR GATE VALVE INSTALLATION SHALL OCCUR AT VALVE FLANGE.
2. RISER TERMINATION FOR SERVICE CONNECTION (2" & SMALLER) SHALL OCCUR 1" BELOW CORP STOP.
3. VALVE BOX LID SHALL BE OILED PRIOR TO PAVING OR CLEANING TO ENSURE THAT LID MARKINGS ARE LEGIBLE.
4. INSTALL VALVE BOX LID FLUSH WITH FINAL PAVING OR GROUND SURFACE.

| San Lorenzo Valley WATER DISTRICT | DATE: 6/29/2021 SCALE: NTS DRAWN BY: JWS APPROVED BY: J.L.W STD DWG | STANDARD VALVE BOX INSTALLATION | 13060 Hwy 9 Boulder Creek, CA 95006 (831) 338-2153 | SHEET SD-2 |
|---|---|---|---|---|

NO PART OF THIS DOCUMENT MAY BE REPRODUCED IN ANY FORM INCLUDING PHOTOCOPY, RECORDING OR ANY INFORMATION RETRIEVAL AND STORAGE SYSTEM, WITHOUT PERMISSION IN WRITING FROM SLVWD.

CONNECTION NOTES:

1. TEE SHALL MATCH PIPELINE MATERIAL AND PRESSURE CLASS.
2. TAPPING SLEEVE FOR DUCTILE IRON MAINS SHALL BE JCM 412 EPOXY COATED CARBON STEEL WITH ELECTROPLATED HARDWARE.
3. TAPPING SLEEVE FOR HDPE (IPS SIZES), WELDED STEEL, AND PVC MAINS SHALL BE JCM 422 EPOXY COATED CARBON STEEL WITH ELECTROPLATED HARDWARE
4. DISTRICT INSPECTOR SHALL BE ON SITE DURING HOT TAP
5. SUBSTITUTIONS REQUIRE WRITTEN APPROVAL OF DISTRICT ENGINEER

HYDRANT NOTES:

1. STEAMER HYDRANTS SHALL BE CLOW F900 SERIES MODEL 960 (FACTORY COATED YELLOW) OR EQUAL APPROVED BY ENGINEER (PAINTED CHROME YELLOW ON SITE).
2. FIRE HYDRANT SHALL BE FURNISHED WITH BURIES WITH INLETS THAT MAY BE MECH. JOINT OR RUBBER RING TYPE. HYDRANT SHALL HAVE HOSE CAP CHAINS. ALL HYDRANTS SHALL HAVE (1) 4-1/2" DIA. & (2) 2-1/2" DIA NATIONAL STANDARD HOSE THREAD OUTLETS.
3. FIRE HYDRANT SHALL BE COVERED WITH BURLAP SACK UNTIL HYDRANT IS PUT INTO SERVICE.

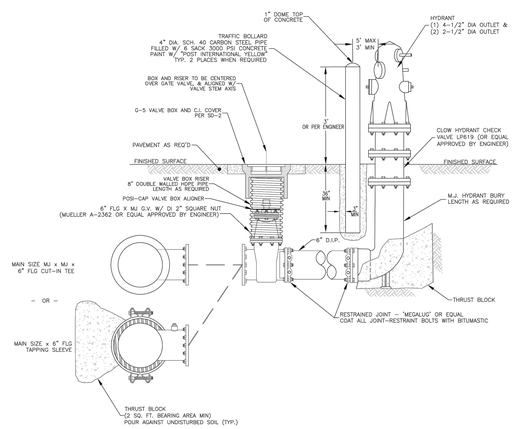


| San Lorenzo Valley WATER DISTRICT | DATE: 6/29/2021 SCALE: NTS DRAWN BY: JWS APPROVED BY: J.L.W STD DWG | STANDARD 6" STEAMER FIRE HYDRANT | 13060 Hwy 9 Boulder Creek, CA 95006 (831) 338-2153 | SHEET SD-3 |
|---|---|---|---|---|

NO PART OF THIS DOCUMENT MAY BE REPRODUCED IN ANY FORM INCLUDING PHOTOCOPY, RECORDING OR ANY INFORMATION RETRIEVAL AND STORAGE SYSTEM, WITHOUT PERMISSION IN WRITING FROM SLVWD.

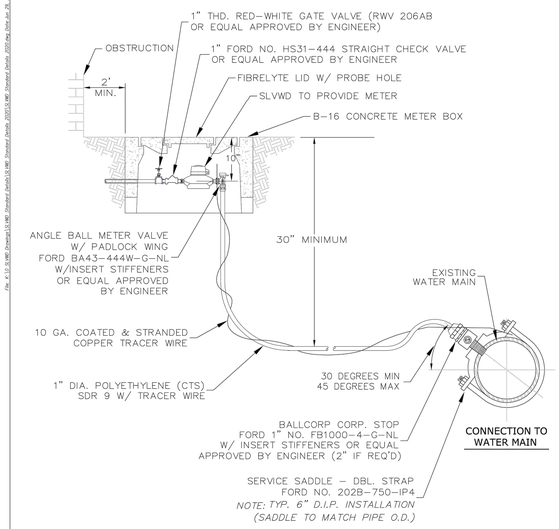


| San Lorenzo Valley WATER DISTRICT | DATE: 6/29/2021 SCALE: NTS DRAWN BY: JWS APPROVED BY: J.L.W STD DWG | STANDARD WATER SERVICE INSTALLATION 1" METERS | 13060 Hwy 9 Boulder Creek, CA 95006 (831) 338-2153 | SHEET SD-4 |
|---|---|---|---|---|

NO PART OF THIS DOCUMENT MAY BE REPRODUCED IN ANY FORM INCLUDING PHOTOCOPY, RECORDING OR ANY INFORMATION RETRIEVAL AND STORAGE SYSTEM, WITHOUT PERMISSION IN WRITING FROM SLVWD.

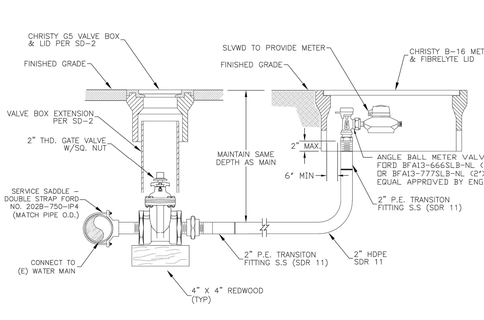


PROFILE

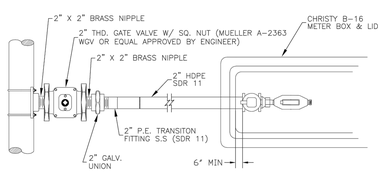


PLAN

NOTE: FOR 1.5" SERVICE LINE, ALL PIPES LABELED AS 2" ARE ASSUMED TO BE 1.5".

| San Lorenzo Valley WATER DISTRICT | DATE: 6/29/2021 SCALE: NTS DRAWN BY: JWS APPROVED BY: J.L.W STD DWG | STANDARD 1.5" OR 2" SERVICE LINE CONNECTION | 13060 Hwy 9 Boulder Creek, CA 95006 (831) 338-2153 | SHEET SD-5 |
|---|---|---|---|---|

NO PART OF THIS DOCUMENT MAY BE REPRODUCED IN ANY FORM INCLUDING PHOTOCOPY, RECORDING OR ANY INFORMATION RETRIEVAL AND STORAGE SYSTEM, WITHOUT PERMISSION IN WRITING FROM SLVWD.

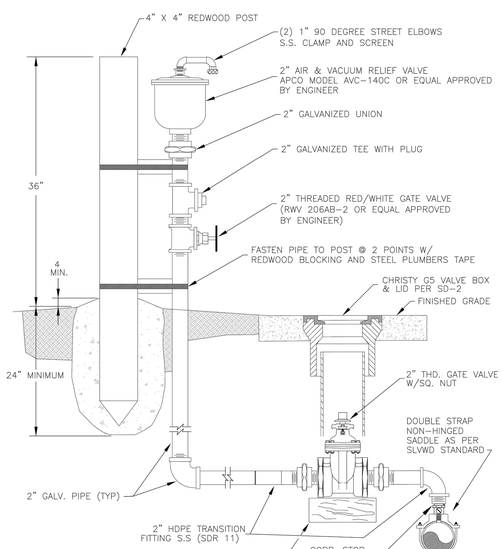


NOTES:

1) WRAP UG GALV. PIPE WITH CALPICO TAPE.
2) CONTACT INSPECTOR FOR EXACT PLACEMENT OF AIR VENT
3) ABOVE GROUND PIPE & VALVES SHALL BE PAINTED WITH TWO COATS OF GREEN PAINT

| San Lorenzo Valley WATER DISTRICT | DATE: 6/29/2021 SCALE: NTS DRAWN BY: JWS APPROVED BY: J.L.W STD DWG | STANDARD 2" AIR/VAC RELEASE | 13060 Hwy 9 Boulder Creek, CA 95006 (831) 338-2153 | SHEET SD-7 |
|---|---|---|---|---|

NO PART OF THIS DOCUMENT MAY BE REPRODUCED IN ANY FORM INCLUDING PHOTOCOPY, RECORDING OR ANY INFORMATION RETRIEVAL AND STORAGE SYSTEM, WITHOUT PERMISSION IN WRITING FROM SLVWD.

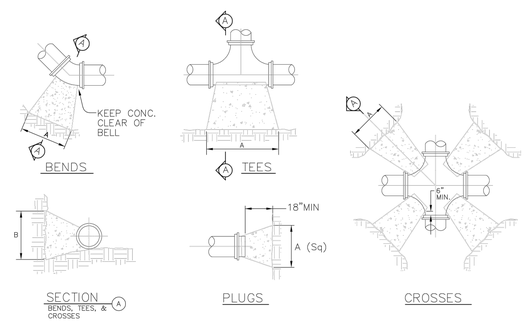


(SEE NOTE No. 13)

REQUIRED BEARING AREA ON UNDISTURBED SOIL AND TYPICAL DIMENSIONS

| SIZE | CROSSES/90° BENDS | | | 45° BENDS | | | 22 1/2° BENDS | | | TEES & PLUGS | | |
|---|---|---|---|---|---|---|---|---|---|---|---|---|
| | AREA SQ. FT. | "A" | "B" | AREA SQ. FT. | "A" | "B" | AREA SQ. FT. | "A" | "B" | AREA SQ. FT. | "A" | "B" |
| 4" | 1.8 | 22" | 12" | 1.0 | 12" | 12" | 0.5 | 10" | 7" | 1.3 | 16" | 12" |
| 6" | 4.0 | 36" | 16" | 2.2 | 20" | 16" | 1.1 | 16" | 10" | 2.8 | 29" | 14" |
| 8" | 7.1 | 42" | 24" | 3.8 | 23" | 24" | 2.0 | 21" | 14" | 5.0 | 45" | 16" |
| 10" | 11.1 | 53" | 30" | 6.1 | 30" | 30" | 3.1 | 22" | 20" | 7.9 | 48" | 24" |
| 12" | 16.0 | 58" | 40" | 8.7 | 36" | 36" | 4.4 | 32" | 20" | 11.3 | 54" | 30" |
| 14" | 21.6 | 74" | 42" | 11.9 | 43" | 40" | 6.0 | 36" | 24" | 15.4 | 62" | 36" |
| 16" | 28.4 | 85" | 48" | 15.5 | 53" | 42" | 7.8 | 37" | 30" | 20.1 | 69" | 42" |

NOTES:

1. BASED ON 150 PSI STATIC PRESSURE PLUS 100 PSI WATER HAMMER AND 2500 PSF SOIL BEARING
2. FOR UNSTABLE SOIL CONDITIONS, CHECK WITH ENGINEER FOR THRUST BLOCK DIMENSIONS
3. FOR MAIN SIZES GREATER THAN 16" SEE ENGINEER FOR THRUST BLOCK DIMENSIONS

| San Lorenzo Valley WATER DISTRICT | DATE: 6/29/2021 SCALE: NTS DRAWN BY: JWS APPROVED BY: J.L.W STD DWG | STANDARD THRUST BLOCK INSTALLATION | 13060 Hwy 9 Boulder Creek, CA 95006 (831) 338-2153 | SHEET SD-8 |
|---|---|---|---|---|

NO PART OF THIS DOCUMENT MAY BE REPRODUCED IN ANY FORM INCLUDING PHOTOCOPY, RECORDING OR ANY INFORMATION RETRIEVAL AND STORAGE SYSTEM, WITHOUT PERMISSION IN WRITING FROM SLVWD.

**UNDERGROUND SERVICE ALERT**
**CALL: TOLL FREE**
**1-800**
**227-2600**
**TWO WORKING DAYS BEFORE YOU DIG**

| REV. NO. | DESCRIPTION | BY | DATE |
|---|---|---|---|
| 1 | | | |
| 2 | | | |
| 3 | | | |
| 4 | | | |
| 5 | | | |

Schaaf & Wheeler
CONSULTING CIVIL ENGINEERS
3 Quail Run Circle, Suite 101
Salinas, CA 93907-2348
(831) 883-4848

REGISTERED PROFESSIONAL ENGINEER — NEBRAK J. STEGBERG — No. 69703 — CIVIL — STATE OF CALIFORNIA

**STANDARD DETAILS - I**

**QUAIL HOLLOW ROAD PIPELINE REPLACEMENT**

| | | |
|---|---|---|
| DESIGNED BY: | JCT | DATE: 7/12/2021 |
| DRAWN BY: | JCT | DATE: 7/12/2021 |
| QC CHECKED BY: | AAS | DATE: 7/12/2021 |
| PROJECT NO.: | | |
| SCALE: | AS SHOWN | |
| SUBMITTAL: | 100% SUBMITTAL | |

C6.1

SHEET 12 OF 14

C:\USERS\JTABUE\DESKTOP\SLVWD QHQUAL HOLLOW WORKING\SLVWD_PIPELINES-DETAILS.DWG 7/12/2021 BY JTABUE

NOTES:

1) DISTRICT INSPECTOR SHALL BE ONSITE DURING HOT TAP.
2) BACKFILL TO BE 2 SACK CONCRETE/SAND SLURRY. (TAGS REQUIRED)
3) FOLLOW ALL JURISDICTIONAL PERMIT REQUIREMENTS. ALL OTHER INFORMATION ON DRAWING OR SPECIFICATIONS ARE SUPERCEDED BY THE CONSTRUCTION PERMIT REQUIREMENTS.

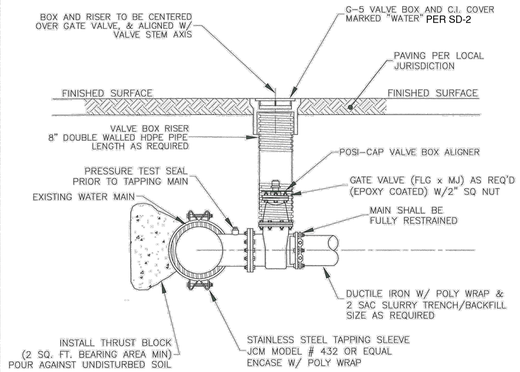


San Lorenzo Valley Water District
Serving the San Lorenzo Valley Since 1941
13060 Highway 9
Boulder Creek, California 95006
Phone: (831) 338-2153 Fax: (831) 338-7986
www.SLVWD.com

**Standard Hot Tap Detail**

DRAWN BY: R. Menzies
DATE DRAWN: FEB 2016
DWG. NUMBER: SD-14

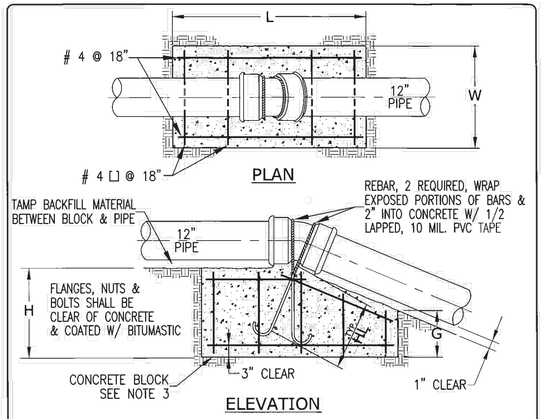


| PIPE SIZE | 11-1/4° BEND | | | | | | 22-1/2° BEND | | | | | | 45° BEND | | | | | |
|---|---|---|---|---|---|---|---|---|---|---|---|---|---|---|---|---|---|---|
| | L | W | H | G | BAR | HL | L | W | H | G | BAR | HL | L | W | H | G | BAR | HL |
| 6" | 3.5 | 2 | 2.0 | 1 | 4 | 14 | 4.5 | 2 | 2.7 | 1 | 4 | 14 | 4.5 | 4 | 2.8 | 1 | 4 | 14 |
| 8" | 3.5 | 3 | 2.3 | 1 | 4 | 14 | 4.5 | 4 | 3.0 | 1.5 | 4 | 14 | 5.5 | 5 | 3.2 | 1.5 | 5 | 18 |
| 10" | 4 | 3.5 | 2.7 | 1 | 4 | 14 | 5 | 4 | 3.8 | 1.5 | 4 | 14 | 6 | 5 | 4.6 | 1.5 | 6 | 22 |
| 12" | 4 | 3.5 | 3.9 | 1 | 4 | 14 | 5 | 4 | 5.4 | 2 | 5 | 18 | 6.5 | 5 | 6.2 | 2.5 | 7 | 32 |

THRUST BLOCK DIMENSIONS - UPWARD THRUST

NOTES:

1) ENCASE ALL BURIED METALLIC SURFACES WITH POLYETHYLENE WRAP AS SPECIFIED IN AWWA C105.
2) RESTRAINED JOINT DUCTILE IRON PIPE MAY BE USED IN PLACE OF THRUST BLOCK, CONTACT SLVWD FOR APPROVAL AND DETAILS.
3) DIMENSIONS L, W, H, G ARE IN FEET.
4) THRUST BLOCK DIMENSIONS BASED ON 250 PSI TEST PRESSURE AND CONCRETE SHALL BE 2500 PSI MIN, 28 DAY COMPRESSIVE STRENGTH.

San Lorenzo Valley Water District
Serving the San Lorenzo Valley Since 1941
13060 Highway 9
Boulder Creek, California 95006
Phone: (831) 338-2153 Fax: (831) 338-7986
www.SLVWD.com

**Standard Reverse (Upward) Thrust Block**

DRAWN BY: R. Menzies
DATE DRAWN: DEC 2014
DWG. NUMBER: SD-21

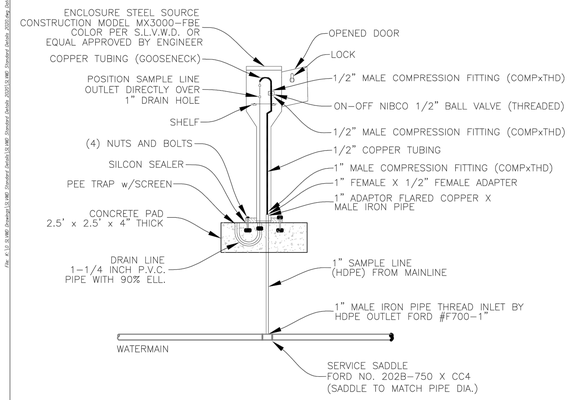


NOTES:

1) WHEN INSTALLING WATER SAMPLER, 1" HDPE WILL BE APPROXIMATELY 6" ABOVE CONCRETE SLAB.
2) INSERT COPPER TUBING INTO GROOVED FOOTING, THE COPPER TUBING MAY NEED TO BE CUT TO FI INSIDE THE WATER SAMPLER.
3) PLACE WATER SAMPLER CASE OVER BOTH THE COPPER TUBING AND THE 1" DRAIN HOLE.
4) ATTACH THE GOOSENECK COPPER TUBING AND COMPRESSION FITTINGS.
5) A SCREEN WILL BE PLACED MANUALLY IN THE PEE TRAP.

San Lorenzo Valley WATER DISTRICT

| | |
|---|---|
| DATE | 6/29/2022 |
| SCALE | NTS |
| DRAWN BY | JWS |
| APPROVED BY | A.M. |
| | STD DWG |

STANDARD WATER SAMPLING STATION

13060 Hwy 9
Boulder Creek, CA 95006
(831) 338-2153

SHEET SD-12

NO PART OF THIS DOCUMENT MAY BE REPRODUCED IN ANY FORM INCLUDING PHOTOCOPY, RECORDING OR ANY INFORMATION RETRIEVAL AND STORAGE SYSTEM, WITHOUT PERMISSION IN WRITING FROM SLVWD.

APPLY FOG SEAL – 1' BEYOND T-SECTION FOR TRENCH LENGTH LESS THAN 500 FT
~~APPLY TYPE II SLURRY SEAL – FULL LANE WIDTH FOR TRENCH LENGTH GREATER THAN 500 FT (SEE NOTE 8)~~

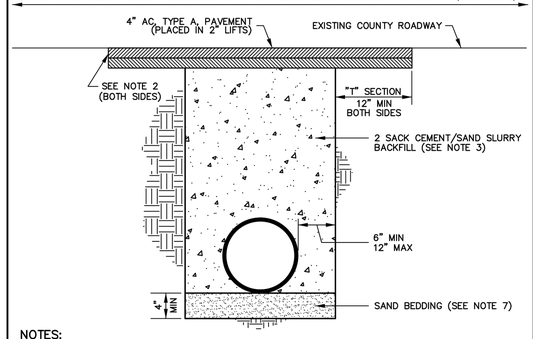


NOTES:

1. MINIMUM STANDARDS ARE AS FOLLOWS:
   A. PAVED ROADS – 4" AC, TYPE A, 1/2" MAX, PLACED IN 2" LIFTS
   B. NON-PAVED ROADS – SINGLE SEAL COAT OVER 6" AB, CLASS 2, IN TRENCH AREA, THEN SINGLE SEAL COAT ENTIRE ROAD SECTION.
2. CUT EXISTING PAVEMENT TO PRODUCE A STRAIGHT VERTICAL FACE AGAINST WHICH TO BUTT THE TRENCH PAVEMENT.
3. CEMENT/SAND SLURRY SHALL BE MIXED IN A TRANSIT MIXER (CERTIFICATION TAGS REQUIRED) AND CONSIST OF 188 lbs OF CEMENT FOR EACH CUBIC YARD OF MATERIAL.
4. TRENCHES OUTSIDE A PAVED AREA OR A ROAD RIGHT-OF-WAY SHALL HAVE BACKFILL COMPACTED TO NOT LESS THAN 90% RELATIVE COMPACTION.
5. TRENCH CAP AND LAYOUT REQUIREMENTS:
   A. IF THE EDGE OF THE ASPHALT TRENCH CAP IS WITHIN 2' OF THE EXISTING EDGE OF PAVEMENT, LIP OF GUTTER, OR LANE LINE, THE REMAINING PAVEMENT SHALL BE REMOVED AND THE TRENCH PAVING SHALL BE EXTENDED TO THE EDGE OF PAVEMENT, LIP OF GUTTER, OR LANE LINE.
   B. IF THERE IS 4' OR LESS BETWEEN TRENCH CAPS, THE REMAINING PAVEMENT BETWEEN TRENCHES SHALL BE REMOVED AND TRENCH PAVING SHALL BE EXTENDED TO CREATE A SINGLE TRENCH CAP.
6. ANY EXCEPTIONS TO THIS DETAIL MUST BE APPROVED BY THE DIRECTOR OF PUBLIC WORKS.
7. CLEAN SAND COMPACTED TO 95% RELATIVE COMPACTION MAY BE USED FOR PIPE BEDDING BELOW BOTTOM OF PIPE. FOR WATER MAIN LINES THE SAND BEDDING MAY EXTEND UP TO 12" ABOVE TOP OF PIPE. CEMENT SAND SLURRY SHALL BE USED ABOVE SAND ZONE.
8. ~~WHERE NO PAINTED CENTERLINE EXISTS, A FULL ROAD WIDTH TYPE II SLURRY SEAL COAT IS REQUIRED AFTER TRENCH PAVING.~~

**LONGITUDINAL TRENCH DETAIL**

REV 5/19 — SANTA CRUZ COUNTY STANDARD DETAIL — FIG. EP-1



APPLY FOG SEAL 1' BEYOND T-SECTION

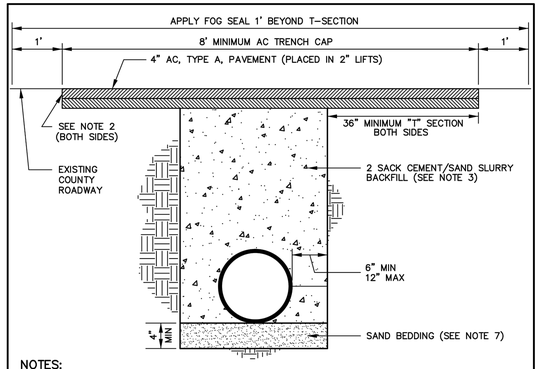


NOTES:

1. MINIMUM STANDARDS ARE AS FOLLOWS:
   A. PAVED ROADS – 4" AC, TYPE A, 1/2" MAX, PLACED IN 2" LIFTS
   B. NON-PAVED ROADS – SINGLE SEAL COAT OVER 6" AB, CLASS 2, IN TRENCH AREA, THEN SINGLE SEAL COAT ENTIRE ROAD SECTION.
2. CUT EXISTING PAVEMENT TO PRODUCE A STRAIGHT VERTICAL FACE AGAINST WHICH TO BUTT THE TRENCH PAVEMENT.
3. CEMENT/SAND SLURRY SHALL BE MIXED IN A TRANSIT MIXER (CERTIFICATION TAGS REQUIRED) AND CONSIST OF 188 lbs OF CEMENT FOR EACH CUBIC YARD OF MATERIAL.
4. TRENCHES OUTSIDE A PAVED AREA OR A ROAD RIGHT-OF-WAY SHALL HAVE BACKFILL COMPACTED TO NOT LESS THAN 90% RELATIVE COMPACTION.
5. TRENCH CAP AND LAYOUT REQUIREMENTS:
   A. IF THE EDGE OF THE ASPHALT TRENCH CAP IS WITHIN 2' OF THE EXISTING EDGE OF PAVEMENT, LIP OF GUTTER, OR LANE LINE, THE REMAINING PAVEMENT SHALL BE REMOVED AND THE TRENCH PAVING SHALL BE EXTENDED TO THE EDGE OF PAVEMENT, LIP OF GUTTER, OR LANE LINE.
   B. IF THERE IS 4' OR LESS BETWEEN TRENCH CAPS, THE REMAINING PAVEMENT BETWEEN TRENCHES SHALL BE REMOVED AND TRENCH PAVING SHALL BE EXTENDED TO CREATE A SINGLE TRENCH CAP.
6. ANY EXCEPTIONS TO THIS DETAIL MUST BE APPROVED BY THE DIRECTOR OF PUBLIC WORKS.
7. CLEAN SAND COMPACTED TO 95% RELATIVE COMPACTION MAY BE USED FOR PIPE BEDDING BELOW BOTTOM OF PIPE. FOR WATER MAIN LINES THE SAND BEDDING MAY EXTEND UP TO 12" ABOVE TOP OF PIPE. CEMENT SAND SLURRY SHALL BE USED ABOVE SAND ZONE.
8. ~~WHEN MULTIPLE CROSS TRENCHES ARE INSTALLED OR WHEN A CROSS TRENCH IS INSTALLED IN COMBINATION WITH A LONGITUDINAL TRENCH, A TYPE II SLURRY SEAL COAT MAY BE REQUIRED.~~

**CROSS TRENCH DETAIL**

REV 5/19 — SANTA CRUZ COUNTY STANDARD DETAIL — FIG. EP-2



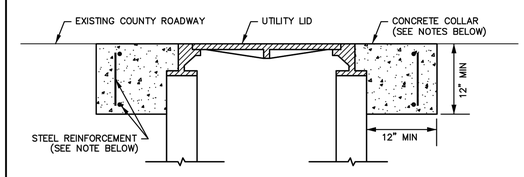


NOTES:

1. CONCRETE COLLAR SHALL EXTEND TO BE FLUSH WITH ADJACENT ROADWAY SURFACE, NO ASPHALT SHALL BE PLACED OVER TOP.
2. CONCRETE SHALL USE TYPE III HIGH-EARLY STRENGTH CEMENT WITH A MINIMUM 28-DAY COMPRESSIVE STRENGTH OF 5000 PSI.
3. BROADCAST 1 LB OF LAMPBLACK PIGMENT ON CONCRETE SURFACE DURING CURE TO ACHIEVE DARKENED APPEARANCE.
4. CONCRETE COLLAR SHALL BE PROTECTED FROM TRAFFIC USING TRENCH PLATES OR OTHER ACCEPTABLE MEANS. CONCRETE SHALL NOT BE REOPENED TO TRAFFIC UNTIL A MINIMUM COMPRESSIVE STRENGTH OF 3000 PSI HAS BEEN ACHIEVED.
5. CONCRETE SHALL BE REINFORCED HORIZONTALLY WITH #4 REBAR HOOP AROUND GRADE RING AT TOP & BOTTOM, AND VERTICALLY WITH #4 REBAR TIES SPACED AT 12". REBAR SHALL BE KEPT A MINIMUM OF 2" CLEAR FROM ALL EDGES.
6. THIS DETAIL SHALL APPLY TO MANHOLES, VAULTS, VALVE BOXES, MONUMENT WELLS, OR ANY OTHER UTILITY LID STRUCTURE LOCATED WITHIN COUNTY MAINTAINED ROADWAYS. CONCRETE COLLAR SHALL BE ROUND FOR CIRCULAR UTILITY LIDS AND RECTANGULAR FOR RECTANCULAR LIDS.

**UTILITY LID PAVING DETAIL**
**FOR UTILITY LIDS LOCATED ON COUNTY MAINTAINED ROADWAYS**

REV 5/19 — SANTA CRUZ COUNTY STANDARD DETAIL — FIG. EP-5



**UNDERGROUND SERVICE ALERT**
**CALL: TOLL FREE**
**1-800**
**227-2600**
TWO WORKING DAYS BEFORE YOU DIG

| REV. NO. | DESCRIPTION | BY | DATE |
|---|---|---|---|
| 1 | | | |
| 2 | | | |
| 3 | | | |
| 4 | | | |
| 5 | | | |

Schaaf & Wheeler
CONSULTING CIVIL ENGINEERS
3 Quail Run Circle, Suite 101
Salinas, CA 93907-2348
(831) 883-4848

REGISTERED PROFESSIONAL ENGINEER — NEWMAN A. STEGBERG — No. 69703 — CIVIL — STATE OF CALIFORNIA

**STANDARD DETAILS - II**

**QUAIL HOLLOW ROAD PIPELINE REPLACEMENT**

San Lorenzo Valley WATER DISTRICT

| | | |
|---|---|---|
| DESIGNED BY: | JCT | DATE: 7/12/2021 |
| DRAWN BY: | JCT | DATE: 7/12/2021 |
| QC CHECKED BY: | AAS | DATE: 7/12/2021 |
| PROJECT NO.: | | |
| SCALE: | AS SHOWN | |
| SUBMITTAL: | 100% SUBMITTAL | |

C6.2

SHEET 13 OF 14

C:\USERS\JTABUE\DESKTOP\SLVWD QHQUAL HOLLOW WORKING\SLVWD_PIPELINES-DETAILS.DWG 7/12/2021 BY JTABUE

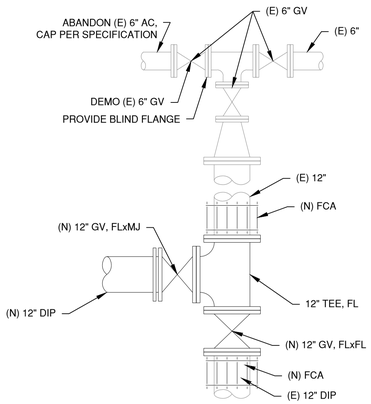


## ZAYANTE CONNECTION

1"=2'

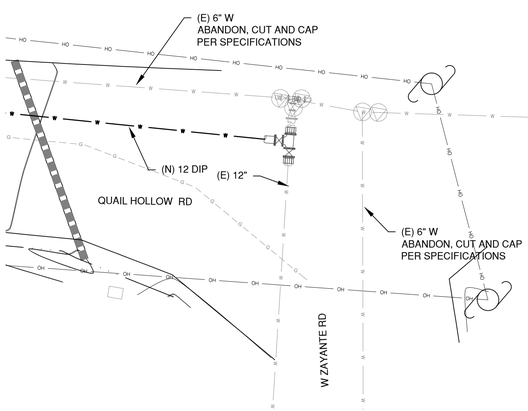


## ZAYANTE CONNECTION

1"=10'

1

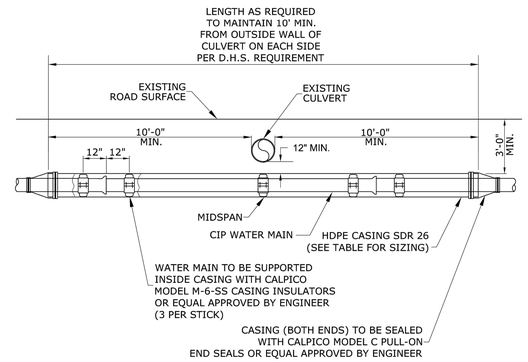


| MAIN SIZE | SLEEVE SIZE |
|---|---|
| 4" | 10" |
| 6" | 12" |
| 8" | 14" |
| 10" | 16" |
| 12" | 18" |
| 14" | 20" |

San Lorenzo Valley WATER DISTRICT

| | | | |
|---|---|---|---|
| DATE: 6/29/2021 | STANDARD WATER MAIN CASING | 13060 Hwy 9 Boulder Creek, CA 95006 (831) 338-2153 | SHEET SD-9 |
| SCALE: NTS | | | |
| DRAWN BY: JWS | | | |
| APPROVED BY: A.W. | | | |
| STD. DWG | | | |

NO PART OF THIS DOCUMENT MAY BE REPRODUCED IN ANY FORM INCLUDING PHOTOCOPY, RECORDING OR ANY INFORMATION RETRIEVAL AND STORAGE SYSTEM, WITHOUT PERMISSION IN WRITING FROM SLVWD.

## PIPE UNDERCROSS

NTS

2

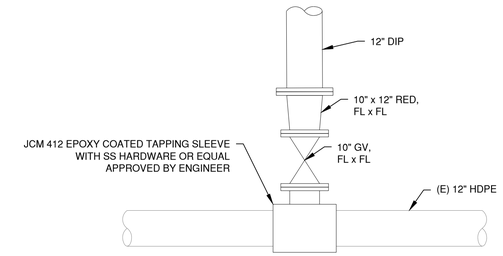


## CUMORA CONNECTION

1"=2'

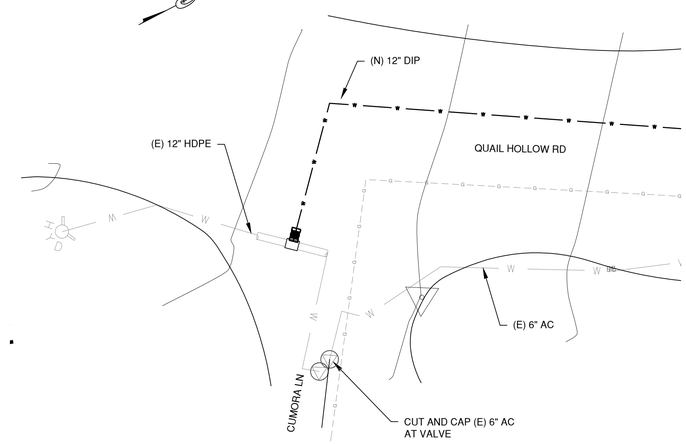


NOTE: CONTRACTOR TO POTHOLE AND VERIFY WITH OWNER ALL EXISTING PIPELINES AND CONNECTIONS.

## CUMORA CONNECTION

1"=10'

3

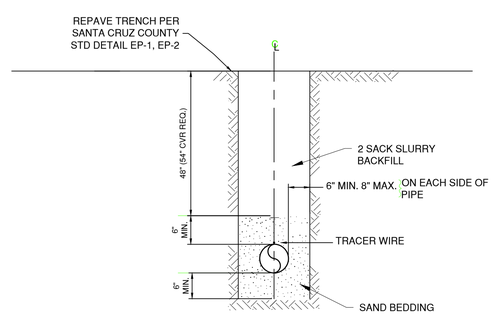


TRENCH SECTION

## PIPE BEDDING

NTS

UNDERGROUND SERVICE ALERT
CALL: TOLL FREE
1-800
227-2600
TWO WORKING DAYS
BEFORE YOU DIG

| REV. NO. | DESCRIPTION | BY | DATE |
|---|---|---|---|
| 1 | | | |
| 2 | | | |
| 3 | | | |
| 4 | | | |
| 5 | | | |

Schaaf & Wheeler
CONSULTING CIVIL ENGINEERS
3 Quail Run Circle, Suite 101
Salinas, CA 93907-2348
(831) 883-4848

REGISTERED PROFESSIONAL ENGINEER
NEBRAY A. STEREBENZ
No. 69703
CIVIL
STATE OF CALIFORNIA

DETAILS

# QUAIL HOLLOW ROAD PIPELINE REPLACEMENT

San Lorenzo Valley WATER DISTRICT

| | | |
|---|---|---|
| DESIGNED BY: | JCT | DATE: 7/12/2021 |
| DRAWN BY: | JCT | DATE: 7/12/2021 |
| QC CHECKED BY: | AAS | DATE: 7/12/2021 |
| PROJECT NO.: | | |
| SCALE: | AS SHOWN | |
| SUBMITTAL: | 100% SUBMITTAL | |

C6.3

SHEET 14 OF 14

C:\USERS\JTABUE\DESKTOP\SLVWD QH\QUAIL HOLLOW WORKING\SLVWD_PIPELINES-DETAILS.DWG 7/12/2021 BY JTABUE