FREYER & LAURETA, INC.

Civil Engineers – Surveyors – Construction Managers

The Consolidation of the Bracken Brae and Forest Springs Mutual Water Companies

February 24, 2022

San Lorenzo Valley WATER DISTRICT

FREYER & LAURETA, INC. CIVIL ENGINEERS • SURVEYORS • CONSTRUCTION MANAGERS

February 24, 2022

Mr. Josh Wolff, P.E.
District Engineer
San Lorenzo Valley Water District
13060 Highway 9
Boulder Creek, CA 95006

RE: Proposal for Professional Design Services
Bracken Brae and Forest Springs Mutual Water Companies Consolidation Project
San Lorenzo Valley Water District, Boulder Creek, California

Dear Josh,

Freyer & Laureta, Inc. (F&L) is pleased to submit the attached proposal in response to the Request for Proposals (RFP) to provide Professional Design Services to the San Lorenzo Valley Water District (District) for the Bracken Brae and Forest Springs Mutual Water Companies Consolidation Project (Project) dated January 2022. We believe you will find that we have assembled a team of experts to deliver construction documents for the Project in a timely manner for the District.

F&L has partnered with the following specialty consultants:

- Cal Engineering & Geology will provide geotechnical engineering support;
- Peterson Structural Engineers will provide structural engineering support;
- Beecher Engineering will provide electrical, instrumentation, and controls support;
- Alpine Development will provide constructability and cost estimating support; and
- Ifland Survey will provide surveying and ampping support.

The F&L Team is comprised of technical experts to develop the necessary construction documents to facilitate successful delivery of the Project. We understand the importance of developing a comprehensive preliminary design including field investigations to identify potential complex field conditions and permitting requirements to develop clear and concise construction documents.

The attached proposal is structured as outlined in the RFP with our proposed fee and schedule included in a separate file. Please contact me at (650) 619-3226 or tarantino@freyerlaureta.com with any questions. We look forward to discussing our proposal in further detail with the District.

Sincerely,
FREYER & LAURETA, INC.

Jeffrey J. Tarantino, P.E.
Vice President

Headquarters:
150 Executive Park Blvd, Suite 4200
San Francisco, CA 94134
Tel: (415) 534-7070
www.freyerlaureta.com

North Bay Office:
505 San Marin Drive, Suite A220
Novato, CA 94945
Tel: (415) 534-7070

East Bay Office:
825 Washington Street, Suite 237
Oakland, CA 94607
Tel: (510) 937-2310

2 Project Description and Approach

The following sections presents the F&L team's understanding of the project including highlighting our team's approach to deliver the critical infrastructure expansion projects identified in the *Request for Proposals to Provide Professional Design Services to the San Lorenzo Valley Water District for the Consolidation of the Bracken Brae and Forest Springs Mutual Water Companies* dated January 2022 (RFP).

2.i Project Background and Identification of Need

San Lorenzo Valley Water District (District) is an urban water supplier established in 1941 and serves several communities within the 136 square-mile San Lorenzo River watershed. The District serves a population of approximately 21,924 through approximately 7,900 connections. The District owns, operates, and maintains two water systems that include the San Lorenzo Valley Water District (SLVWD) and the San Lorenzo Valley Water District – Felton (SLVWD-Felton).

The Bracken Brae and Forest Springs Mutual Water Companies are located approximately 1.5 miles northwest of the District's Lyon Surface Water Treatment Plant (LSWTP). Both mutual water companies were extensively damaged by the CZU fire. From F&L's site visit, it appears new, temporary plastic tanks have been installed to serve the Bracken Brae service area and Forest Springs' existing concrete reservoir continues to serve its customers.

F&L understands that the Bracken Brae and Forest Springs service areas will be served by the LSWTP via the Lyon Tank and the District desires to create a single pressure zone. F&L has developed a potential alternative that allows creation of a new, single pressure zone. At a minimum, one new booster pump station and new storage tanks at a single location will be required. The booster pump station would be located adjacent to Highway 236 between the intersection with Oak Avenue and the entrance to the Bracken Brae community. The figure below presents the approximate limits of both mutual water companies with the proposed improvements utilizing a single pressure zone with one booster pump station and storage tanks.

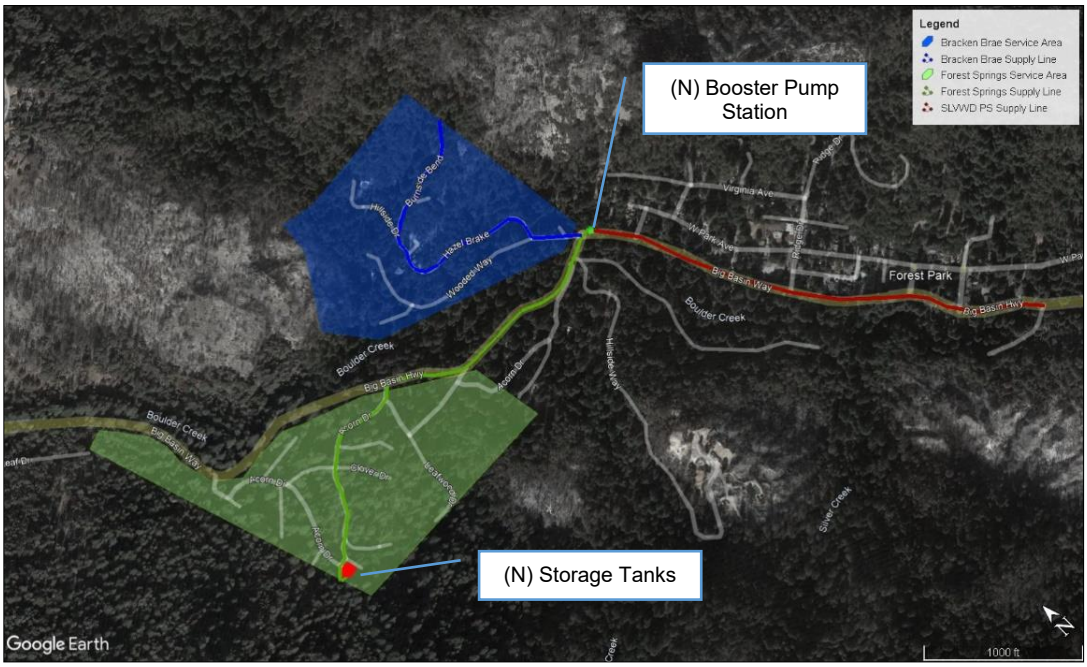

To serve the Bracken Brae and Forest Spring residents, the existing Lyon Pressure zone will need to be extended approximately 4,000 linear feet (lf) to a new booster pump station. The RFP indicated that the potential alignment could follow Highway 236, which is a California Department of Transportation (CalTrans) facility. F&L has reviewed the District's 2021 Water System Master Plan (WSMP) and existing system maps to identify if there may be an alternative alignment that could reduce the scope of improvements within the CalTrans right-of-way. The District maintains existing 2-inch and 4-inch pipelines to serve the Forest Park neighborhood. It would be feasible to replace portions of the existing small diameter distribution system with 8-inch diameter pipeline that could improve the overall reliability of the system serving the Forest Park residents while providing new service to both Bracken Brae and Forest Springs as well as potentially support the future consolidation with the Big Basin Mutual Water Company.

F&L will also explore a potential alternative booster pump station location at the end of W. Park Avenue to minimize the potential improvements within the CalTrans right of way. The potential alternative alignment is shown in the figure below. The alternative location would be a means to leverage the potential alternative pipeline alignment to also serve the Forest Park neighborhood and replace undersized water mains. As part of the preliminary design effort, F&L will facilitate a workshop with District staff to evaluate the pros and cons about the potential pipeline and booster pump station improvements.

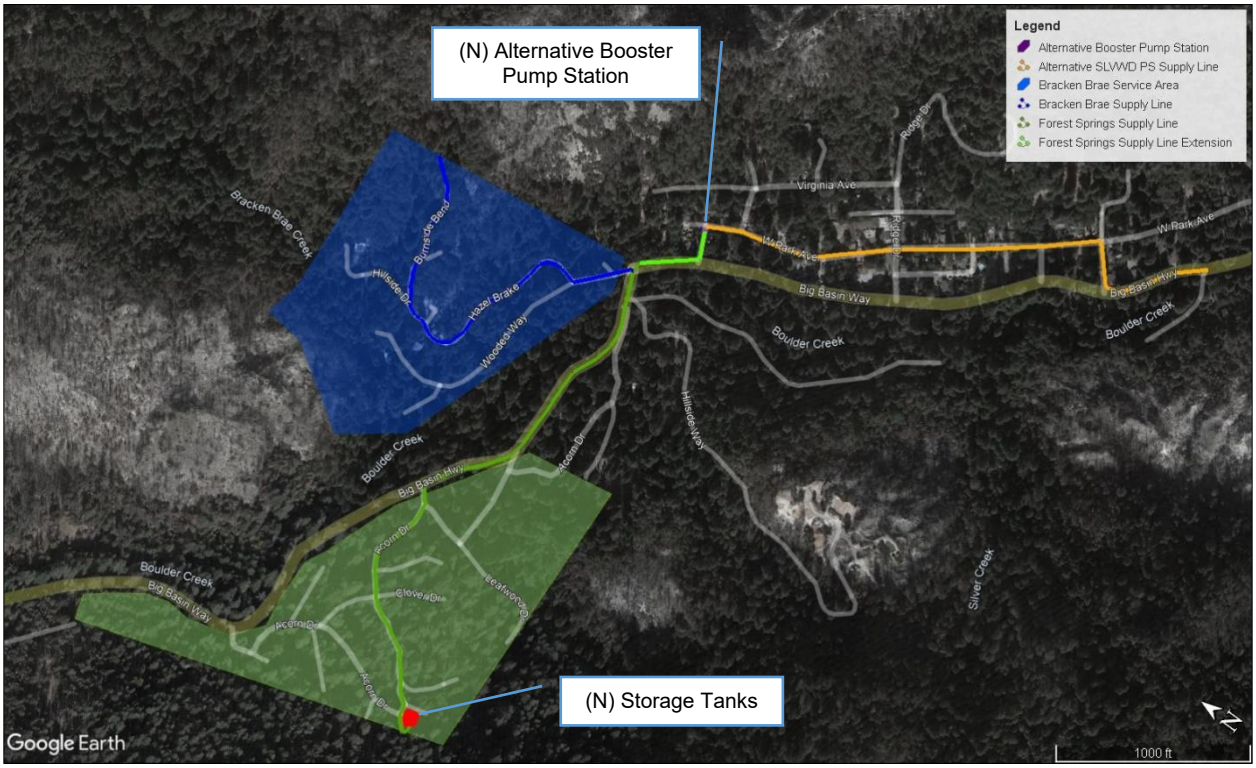

2.ii Key Component Development

We have reviewed the proposed improvements and the existing site conditions at both the Bracken Brae and Forest Springs locations. Based on our experience with similar projects, we have developed preliminary concepts for the key components including:

- Single Storage Tank site;
- Booster Pump Station, and;
- Pipeline improvements.

The preliminary concepts presented in the following sections will be further developed during the Preliminary Design phase in collaboration with District staff. The purpose of the concept development included below was to allow F&L to determine if there is a reasonable potential to provide a project that meets the District desired scope while providing a reliable system that meets the District minimum design criteria identified in the 2022 Standard Specifications and Details.

2.ii.a Storage Tank

To operate the two mutual water companies as a single pressure zone, a single tank or multiple tanks at a single location can be used to meet the requirements of Title 22 of the California Code of Regulations (CCR) Section 64554 for New and Existing Source Capacity, which requires that a water system must be at all times be able to meet the system's Maximum Day Demand (MDD) for a system as a whole and for each individual pressure zone. In addition, Title 22 CCR Section 64554(a)(1) requires that systems with more than 1,000 service connections must also be capable of meeting four hours of Peak Hourly Demand (PHD) with source capacity, storage capacity and/or emergency source connections. Finally, the District's WSMP indicates that for single family residential area that the distribution system must be able to provide fire flow of 1,000 gallons per minute (gpm) for two hours[1]. The following table provides the minimum required storage capacity for a single pressure zone that serves the Bracken Brae and Forest Spring Mutual Water companies.

Service Area	ADD (gpm) (1)	MDD (gpm) (2)	PHD (gpm) (3)	Fire Flow (gpm) (4)	Total Storage (gallons) (5)
Bracken Brae	4.95	7.45	11.20	1,000.00	147,000
Forest Springs	14.85	22.30	33.45		
Total	**19.80**	**29.75**	**44.65**	**1,000.00**	**147,000**

Notes
(1) Average Day Demand (ADD) calculated as the average of the WSMP rural residential demand of 230 gallons per day (gpd) per acre and the industry standard of 240 gpd per home.
(2) MDD is calculated as 1.5 times the ADD in accordance with Title 22 CCR Section 64554(b)(2)(C).
(3) PHD is calculated as 1.5 times the MDD in accordance with Title 22 CCR Section 64554(b)(2)(D).
(4) Fire Flow is cumulative for Bracken Brae and Forest Springs.
(5) Total Storage is equal to MDD for 24 hours plus PDH for four hours plus two hours of Fire Flow.

For new tank designs, various considerations are important to determine the most cost effective tank type. These include site constraints, hydraulic constraints, seismicity, soils properties, initial cost and long term/life cycle costs. F&L's team has extensive experience in the design of various new tank types, as well as condition assessment and repair of existing tanks. This experience in new designs, combined with first-hand knowledge of many tanks' performance over the decades, allows us to efficiently provide realistic options that take into consideration the benefits and risks, and help the District make an informed decision. Additionally, once a decision is made on a tank type, we are able to navigate quickly into design. For the capacity

[1] The District's WSMP fire flow requirement is consistent with California Fire Code Appendix B Table B105.1(1) for single family homes up to 3,600 square feet except the total duration is only one hour.

identified in the previous table, a bolted steel or welded steel are most commonly used. A reinforced concrete tank can provide design solutions as well, as further described below.

Bolted steel tanks are designed to meet AWWA D103 Standards and are generally beneficial for their low initial construction cost and low maintenance costs. However, the life expectancy of a bolted tank is generally lower compared to other options, typically at 25 to 50 years. Welded steel tanks are designed to meet AWWA D100 and also offer a low initial cost, however they require routine maintenance. Welded steel tanks are coated to control corrosion and typically require recoating approximately every 20 years. With proper recoating, a steel tank's life expectancy is rated at 60 to 80 years. Both the bolted and welded steel tanks are limited to a circular shape, which is typically most efficient to contain a liquid, except in instances where the site does not lend itself well to a circular configuration. This may be especially important if there is consideration to maximize the storage capacity in particular at the existing Forest Springs storage tank site.

Importantly for the District's Project, the proposed tank sites are located in an area of high seismicity. Seismic design will be an important consideration and one component of seismic design in tanks is the required freeboard to accommodate the slosh height during a design earthquake event. The slosh height for the proposed tanks is anticipated to be fairly high, and in both steel tank options would likely require a significant increase in the tank wall height, resulting in a taller overall structure.

Alternatively, reinforced concrete tanks are designed to meet ACI 318 and ACI 350 Codes, typically have a higher initial cost, but offer the lowest life cycle cost. Concrete tanks require minimal to no routine maintenance as coatings are not required, unless desired for aesthetics. The life expectancy of a reinforced concrete tank is typically in the 100 year range. Additionally, a concrete tank's roof can be designed to counteract some of the slosh impact, and therefore the freeboard height required in concrete tanks is typically less than that of steel tanks. A concrete tank can also be designed in either a circular or square/rectangular shape to best fit the site configuration. Please note that prestressed concrete tanks are generally not considered for storage capacities under a few hundred thousand gallons as they become cost prohibitive. However, we would be happy to explore these options if desired.

Based on the F&L team's site visit and review of available topographic data, we have developed a conceptual site layout to validate that two, circular tanks could be constructed to provide approximately 147,000 gallons of storage. The existing Forest Springs site is generally level but will require additional excavation and grading to accommodate the two circular tanks. It appears that the existing site was leveled by excavating the existing slope but no retaining structures were provided. To accommodate the two tanks, the site will need to be expanded by excavating into the existing hillside resulting in new retaining structures with walls potentially has high as 12-feet tall. The figure on the following page provides a conceptual site plan indicating the approximate tank layout and conceptual limits of a new retaining walls. The proposed layout allows for 10-feet of clear space around both tanks including separation from the existing edge of the site.

Title 22 CCR Section 64585(b)(4) requires that all new storage tanks have separate inlets and outlets, which is critical to understand when considering using a single tank site to serve both the Bracken Brae and Forest Spring areas. The two mutual water companies are separated by Boulder Creek with an existing bridge that will be utilized to support a new pipe to convey flows from a new pump station to the Forest Springs tank site. To avoid constructing two pipelines across the existing bridge and to meet the requirements of Title 22, an interconnection between

the separate fill and drain lines at the Forest Springs tank will be required to convey flows from the Forest Spring site to Bracken Brae residents. F&L is proposing that although the two tanks at Forest Springs site will be used to meet the fire flow storage requirements of Title 22 that the District integrate a hydropneumatic system into the booster pump station design to meet the MDD and PHD requirements for Bracken Brae. A three way control valve can be used to connect the inlet and outlet pipes for the Forest Springs tank to allow remote opening of the valve based on pressure in the Bracken Brae system and deliver water stored to meet fire flow demands.

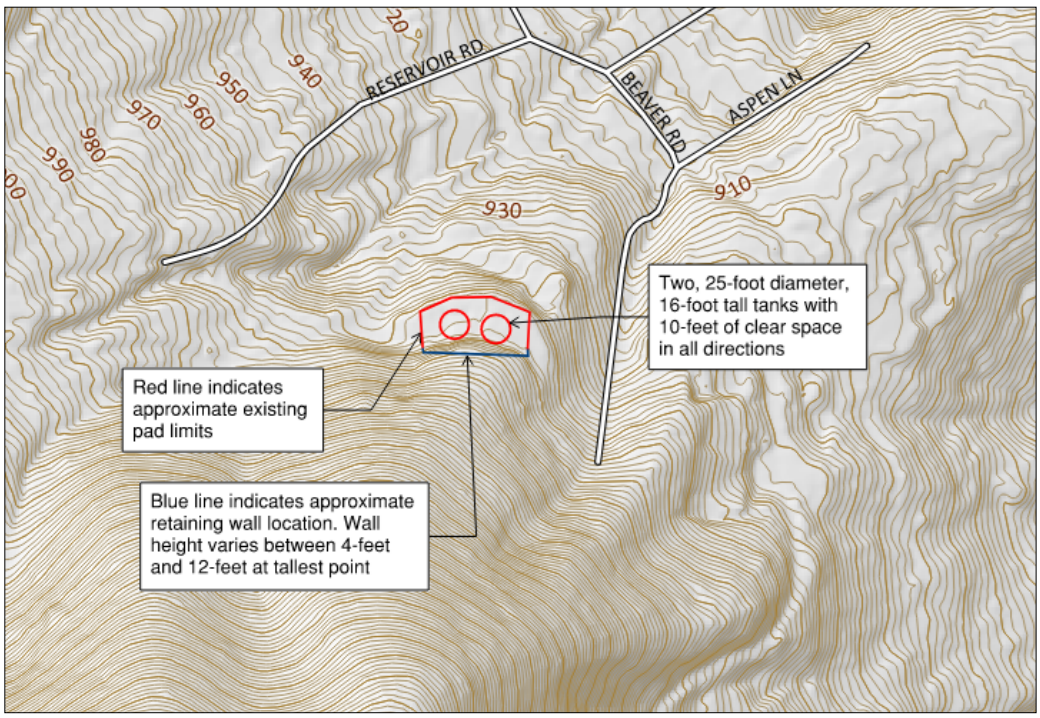

2.ii.b Booster Pump Station

Similar for the preference to have a single storage tank site, the District desires to use a single pump station to serve the Bracken Brae and Forest Springs Mutual Water Companies. However, the District does not have potential control over a site for the booster pump station similar to the Forest Springs site. An initial location is along Highway 236 between Oak Drive and the entrance Bracken Brae community because it may be more feasible to obtain an easement or other land rights from CalTrans. However, the complexities of working with CalTrans may adversely impact the overall delivery schedule for the Project. F&L has developed conceptual pump station sizing and layout described in the following paragraphs assuming that the pump station will be located within the CalTrans right of way but we will perform additional detailed siting studies during the Preliminary Design phase to determine if there is a more optimal site outside of CalTrans right of way.

To determine the optimum design for the booster pump station, the exact location is not critical but we focused on potential solutions that minimize the potential footprint because of the limited available right of way adjacent to Highway 236. Based on the District's WSMP pump station capacity requirement, the booster pump station firm capacity must be equivalent to meet MDD over an eight-hour period. The WSMP also requires that the operational capacity of the storage tank is at least 50% of MDD. The table that follows documents the key flow rate requirements

that will be used to size the minimum capacity of the new booster pump station including F&L's suggested firm capacity flow rate.

MDD Firm Capacity Requirement (gpm) (1)	Operational Capacity (gpm) (2)	Recommended Firm Capacity (gpm)
90	75	100

Notes:
(1) WSMP requires that a pump station minimum firm capacity be equal to MDD delivered over an eight-hour period.
(2) Operational capacity is based on providing 50% of MDD and 50% of PHD

The Bracken Brae and Forest Springs Mutual Water Companies are similar to most areas within the District where there is substantial elevation change within the service area. The maximum elevation within the Bracken Brae service area is approximately Elevation 840 ft and the existing Forest Springs storage tank is approximately Elevation 969 ft. The potential pump station sites are much lower at approximate Elevation 690 ft. The booster pump station design will benefit from the existing elevation of the Lyon Tank at Elevation 848 ft to minimize the overall size of the booster pumps.

F&L evaluated the operational strategies to incorporate the Bracken Brae and Forest Springs service areas with a single, new tank site, hydropneumatic tank, and emergency interconnect between the separate fill and drain lines to develop the proposed operational diagram

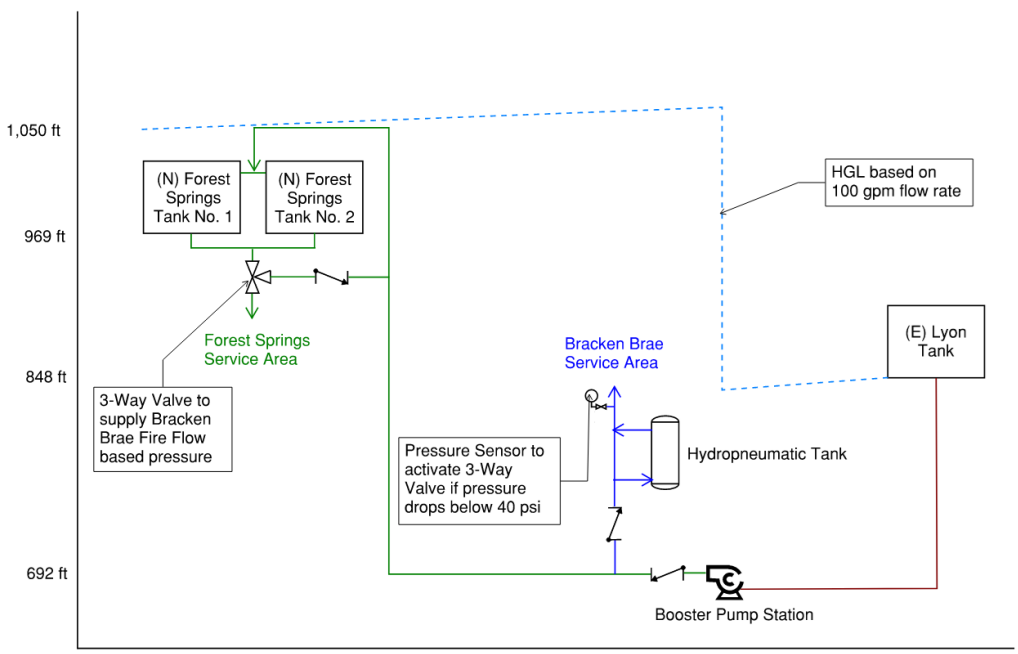

The proposed booster pump station operating criteria is a firm capacity of 100 gpm and total dynamic head (TDH) of 220 ft HGL. F&L identified several vendors that can provide packaged pump skids that include pumps, valves, and controls including variable frequency drives (VFDs). F&L recommends developing the proposed design leveraging skid mounted engineered systems because the pre-engineered system provides an opportunity to meet the critical design criteria while minimizing the overall footprint of the booster pump station. In addition, the booster pump station design could be developed to accommodate a second pump station skid that

could serve the Big Basin community should the District complete the consolidation of a third mutual water company.

As discussed in Section 2.ii.a, the California Water Code requires that all new storage tanks include separate inlet and outlet pipelines. To avoid constructing a separate, independent pipeline from the Forest Springs site to serve daily demands for the Bracken Brae service area, the booster pump station can incorporate a hydropneumatics tank in order to avoid construction of a second storage tank within the Bracken Brae community. The hydropneumatic tank would be approximately 800 gallons in order to provide sufficient capacity to meet one of PHD per the WSMP requirements before the booster pump would be called to start.

The pre-engineered pump skid and hydropneumatic tank including emergency generator would be contained within a pre-engineered concrete building. The concrete building would provide protection from the weather and enhanced protection from wildfires. Utilizing pre-engineered systems allows the Project to secure the most economical solution while providing opportunities to customize the structures as necessary to provide sufficient space for the pump station. The potential configuration of a pre-engineered pump skid with hydropneumatic tank and emergency generator within a pre-engineered building is presented on the following figure.

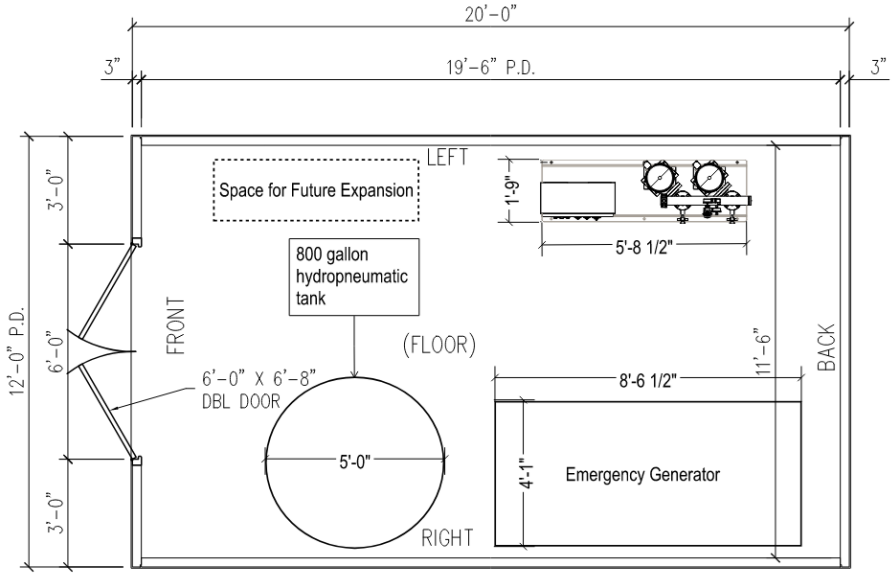

FLOOR PLAN

2.ii.c Pipeline Improvements

New pipelines to convey water from the existing Lyon Tank to the new booster pump station as well as to serve both the Bracken Brae and Forest Springs Mutual Water Companies will be designed using the District's preferred pipeline material of ductile iron (DI). The minimum pipe diameter will be 8-inch to meet the requirements of the District's WSMP as well as maximum velocity criteria for MDD plus fire flow.

As discussed in Section 2.i, the new pipeline between the Lyon Tank and the proposed booster pump station will need to be aligned potentially within Highway 236. However, F&L believes there may be an opportunity to minimize the length of pipeline within Highway 236 while providing a secondary benefit to replace portions of the District's distribution system with the Forest Park neighborhood that is less than 8-inch diameter. Potentially routing the new pipeline alon

g West Park Avenue between Park Street and Oak Avenue will significantly reduce the encroachment within CalTrans right of way while providing the secondary benefit of improving the ability to meet residential fire flow demands within Forest Park.

Critical to the overall reliability and resiliency of the new pipeline systems will be for the two required bridge crossings between the Lyon Tank and the Forest Springs service area. The bridge crossings will require CalTrans approval and will also incorporate critical features such as seismic joints at the beginning and end of the bridge crossing to provide long-term resiliency. The pipeline will likely be installed within a casing that is hung from the underside of the structure to minimize the potential for any leaks from being discharged to Boulder Creek.

2.iii Key Challenges

2.iii.a CalTrans Approvals

A CalTrans encroachment will be required for any new pipeline that is constructed within the CalTrans right of way. In particular, the proposed two bridge crossings will require detailed engineering and coordination with CalTrans to secure the necessary approvals to add the proposed pipeline within a casing. If the final pump station location is also within CalTrans right of way, the encroachment permit may become more complex.

We have secured approval for trenchless crossing of major highways including Highway 101 in San Carlos for a 60-inch tunnel, open trench crossing of Highway 1 in Pacifica, and numerous encroachments into a variety of CalTrans facilities including Skyline Boulevard in San Mateo County. We have found the most successful projects engage CalTrans early and develop the proposed construction details based on standard CalTrans requirements with the necessary enhancements to provide the utility owner with the most robust system. We have found that we can establish a collaborative working relationship with CalTrans including develop regular coordination calls to expedite as much as feasible the permit review and approval process.

2.iii.b Electrical, Instrumentation, and Controls Coordination

The electrical and control system design for the new pump station and tank facilities will require coordination of two key system elements: 1) Site power supply and 2) Site SCADA communication. For the proposed pump station site, it is anticipated that utility Pacific Gas and Electric Company (PG&E) power is available in the area. Presently, applications for new electrical service from PG&E are requiring six months or longer to process so it is important that this application process commence in the Project design phase. The goal will be to solidify the new PG&E service application requirements prior to the Project entering the bidding phase.

Based on the anticipated locations for new water storage tanks, the sites may have challenges to extend any existing PG&E distribution power. Although this will be further investigated at the onset of design, it is possible that PG&E power is not feasible or cost effective at the new storage tank sites. If this is the case, design of a solar-powered electrical supply with battery storage may be required to supply power to storage tank instrumentation and SCADA remote telemetry unit (RTU) equipment. Communication between the new pump station and new remote storage tanks with the District's central SCADA system will most likely be accomplished utilizing radio communication. During the design phase of the Project, a radio survey will need to be conducted which confirms "line of sight" feasibility between the new pump station and storage tanks with the central SCADA system. This radio survey, which can be conducted by a specialty Contractor retained directly by the District, will yield signal strength results which determine if radio signal repeater stations need to be included as part of the Project design.

3 Identification of Prime Consultant

3.i Legal Name and Address of Company

As requested in the RFP, the legal name and address of the company is:

Freyer & Laureta, Inc.
150 Executive Park Blvd, Ste 4200
San Francisco, California 94134

3.ii Legal Form of Company.

Freyer & Laureta, Inc. is a California S-Corporation.

3.iii Additional Company Information

Freyer & Laureta, Inc. is an independent company.

3.iv Primary Contact

Freyer & Laureta, Inc.'s primary point of contact for this proposal is:

Jeffrey J. Tarantino, P.E.
Freyer & Laureta, Inc.
150 Executive Park Blvd, Ste 4200
San Francisco, California 94134
Phone: (415) 534-7070 ex 103
Mobile: (650) 619-3226
Email: tarantino@freyerlaureta.com

3.v Project Team Members

Name	Title	Role
Jeffrey Tarantino, P.E.	Vice President	Project Manager
Rich Laureta, P.E.	President	QA/QC Manager
Jason Feudale	Staff Engineer IV	Senior Design Engineer
Kimberly Yau	Staff Engineer II	Project Engineer

3.vi Firm Information

Freyer & Laureta, Inc. (F&L) is an award-winning consulting engineering firm with offices in San Francisco, Oakland, and Novato. F&L is a State Certified Small Business (Micro) Enterprise (SBE). F&L provides civil engineering, surveying and mapping, and construction management services for a wide range of infrastructure and development projects.

Our presence in the Bay Area and experience with numerous public agencies allows our team members to incorporate local knowledge into our approach. Our Team also understands that as a consultant we need to be thoughtful in our approach to assist clients with solving the correct issue with their identifying needs. With this understanding and our desire to provide great service, we have established an engineering reputation with several agencies and cities throughout the Bay Area including the West Bay Sanitary District, the East Palo Alto Sanitary District, Silicon Valley Clean Water, the City of Burlingame, City of Pacifica, and the City of San Mateo.

4 Identification of Sub Consultants

F&L has partnered with our subconsultants to provide the District with the most experienced team to develop and deliver the deliverables identified in Section 8. The information requested for each subconsultant is provided in the table below followed by a brief description of each firm.

Legal Name	Contact Information	Number of Staff	Bankruptcy or Contractual Issues?
Cal Engineering & Geology Inc.	Dan Peluso, PE, GE, Principal Engineer 6455 Almaden Expy, Ste 100 San Jose, CA 95120 (925) 935-9771	30	No
Peterson Structural Engineers, Inc.	Galit Ryan, P.E., Firm Principal 10650 Treena Street, Suite 111 San Diego, CA 92131 (858) 842-1674	25	No
Beecher Engineering	Todd Beecher, P.E., President 90 Copper Cove Drive, Suite D Copperopolis, CA 95228 (209) 785-8300	1	No
Alpine Development	Aaron Smud, Managing Director 1852 W. 11th Street, Ste 266 Tracy, CA 95376 (925) 605-6762	1	No
Gary Ifland & Associates, dba Ifland Survey, Inc.	Gary Ifland, L.S., Principal Surveyor 4113 Scotts Valley Drive, Ste 102 Scotts Valley, Ca 95066 (831) 426-7941	10	No

4.i Cal Engineering & Geology (Geotechnical Engineering)

Cal Engineering & Geology, Inc. (CE&G) has provided geotechnical and related civil engineering (geo-civil) consulting and design services to public agency and private industry clients throughout California since 1993. In that time, CE&G has worked together with local public agencies to complete more than 300 improvement projects including water and wastewater pipelines, tanks, and pump stations, dams and levees, flood control structures, roads, trails, parks, and buildings. Services for these projects have included geologic/seismic hazard evaluation; geotechnical investigations for foundations, retaining walls, pipelines, and dams; and geo-design for landslide repairs, retaining walls, flood walls, dams, and pedestrian bridges.

4.ii Peterson Structural Engineers (Structural Engineering)

Peterson Structural Engineers (PSE) is a structural engineering and consulting firm specializing in structural evaluations and design particularly in high seismic and high wind zone regions. The company was founded in 1967 by Gary Peterson, whose fastidiousness set the stage for the principles in which the company continues to pride itself – integrity, dedication, and

quality workmanship. To this day, our heart and soul lies in the people of PSE and our commitment to excellence. For over 50 years, PSE has provided design and consulting services for water-related infrastructure projects, including over 200 tank and reservoir projects varying in material from concrete, steel reservoirs of various types, elevated reservoirs and specialized unique systems. There are few structural engineering firms that possess more experience and technical acumen in water storage tanks and reservoirs than PSE.

4.iii Beecher Engineer, Inc. (Electrical, Instrumentation, and Controls)

Beecher Engineering, Inc. (BE) provides design, analysis, planning and construction of electrical power, control and instrumentation systems for the water and wastewater industry. BE and F&L have worked together on a variety of pump station and treatment facility projects for over 10 years.

4.iv Alpine Development (Constructability and Cost Estimating)

Alpine Summit Development LLC (ASD) was founded in 2012 by Managing Director Aaron Smud who has over twenty years of construction experience as an estimator and project manager on numerous project types including water infrastructure, wastewater, storm drainage, site grading, natural gas pipeline, roadways, environmental, and minor structures. Role of experience includes developing resource loaded definitive construction cost estimates, constructability reviews, means and methods, value engineering, contract negotiation, change order estimating and cost validation that all lead to successful project delivery.

4.v Ifland Surveying, Inc. (Surveying and Mapping)

Ifland Survey, Inc. is a professional land surveying and mapping firm based in Santa Cruz, CA. Founded in 1995, the firm's professional and technical staff is skilled and equipped to provide complete surveying and mapping services to a range of clients and project types. We leverage advanced technologies and utilize robotic total stations, drones (UAV), 3D laser scanners (liDar), and GPS units, combined with industry leading software solutions by Autodesk (AutoCAD Civil3d), Trimble (Business Center and Realworks) and Pix4D (photogrammetry software).

5 Project Organization and Experience of the Project Team

The proposed staff from F&L and our team members have been selected based on long-standing working relationships with our project manager in addition to the project experience necessary to deliver comprehensive construction documents to deliver the needed pipeline, booster pump station, and new tank improvements.

5.i Project Manager

Jeffrey (Jeff) Tarantino, P.E. will serve as the Principal-in-Charge/Project Manager for the District's project. Jeff has over 23 years of experience with the management, planning, design, and construction of a variety of public agency infrastructure projects. Jeff has performed as the engineer of record for small improvement projects as well as multi-disciplinary teams of consultants for large infrastructure development projects. Jeff will be the District's primary point of contact, providing leadership and direction to our team members.

Jeff has extensive experience with water main and storage planning, design, and construction projects. His experience includes project implementation through both urban and rural environments that each present unique construction challenges. Jeff recognizes the importance of engaging not only the utility owner's engineering group but also the operations group to be able to develop potential solutions that meet multiple requirements while still recognizing the long-term operation and maintenance strategies.

5.ii Project Organization

5.ii.a Key Staff

We have identified the key staff for the District's project that will support Jeff to complete the necessary studies, risk assessments, and evaluation needed to deliver the Project. The key staff are identified below with one-page resumes provided in Appendix A:

- ***Richard J. Laureta, P.E.*** has broad experience in civil engineering design and construction and will be our team's Quality Control/Quality Assurance officer. In his 27 years of professional engineering experience, he has participated in the design, project management, and construction coordination of city, county, state, and federal rehabilitation projects, as well as private development projects. Rich has extensive experience with the planning, design, and construction of a variety of infrastructure improvement projects including pipeline replacement and rehabilitation, storage tank construction and/or rehabilitation, and street improvement projects. His extensive experience provides him with the detailed knowledge of both regulatory and industry standards.
- **Jason Feudale** will serve as the senior design engineer and will leverage his 15 years of experience in municipal and construction engineering. The experience he has gained in grading, drainage, erosion control, and utility design provides a high level of independent and efficient production of civil engineering construction documents. Mr. Feudale has also gained a great deal of experience in construction inspection. Jason leads F&L's design team for all water infrastructure design and construction management efforts for Stanford University including serving as the resident engineer to collaborate with Stanford's water operators and contractors to resolve field issues as well as optimizing water main alignments during construction.

- **Mr. Dan Peluso, PE, GE,** will provide QA/QC for the geotechnical components of the project. Dan's diverse experience will him to provide geotechnical review of pipeline design to confirm that the design criteria being used for both disciplines are consistent with the geotechnical recommendations. Mr. Peluso is an experienced geotechnical engineer with 34 years of extensive experience providing geotechnical services for treatment plants, sanitary districts, and other public agencies throughout the Bay Area. He has successfully planned and managed small and large projects for both public and private industry clients and has experience in planning and managing geotechnical investigations and construction monitoring for major infrastructure projects throughout California. Mr. Peluso's experience includes managing the geotechnical investigation for the Brentwood Wastewater Treatment Plant Expansion project; providing geotechnical services for various projects at the San Jose/Santa Clara Regional Wastewater Facility; a cut & cover and trenchless replacement of a pipeline for the Crespi Sanitary District sewer main in Pacifica; and managing on-call projects with the Santa Clara Valley Water District.
- **Mr. Kevin Loeb, P.G., C.E.G.** will lead the geotechnical field investigation and development of the geotechnical report. Kevin has over seven years' experience with a focus on linear utility and infrastructure projects. Kevin also has specific experience with previous District water main replacement projects. He will provide guidance to the pipeline, tank, and pump station design criteria including advising on the potential excavatability of the native ground.
- **Galit Ryan, P.E.** will assist Rich with providing QA/QC for the project. Galit has 25 years of water/wastewater industry experience, Galit serves as a Principal and staff manager in PSE's Southern California office. Galit's expertise includes water and wastewater storage reservoir design and rehabilitation, including reinforced concrete and prestressed concrete structures. Her project experience has included above-grade, partially buried, and fully buried structures. Roof types have included flat-slab concrete, concrete dome, aluminum dome and floating roof covers. Her project expertise spans various site and geographic conditions, with special focus on high seismic areas, a wide variety of site conditions including sliding stability, and varying loading conditions including roofs designed to accommodate vehicular traffic and multi-use facilities above.
- **Joe Wendt, P.E.** is Project Manager at PSE with a demonstrated history of experience working ona variety of projects ranging from small to large-scale capital improvement projects for municipalities. He has completed numerous reservoir and pump station designs for both new structures and existing structure evaluations. Joe is well versed in seismic design and analysis, having successfully completed a wide variety of anchorage designs. Joe hasa solid understanding of project needs from initial data gathering and review, to design and analysis, to permitting and construction support, including submittal reviews and on site observations. Joe puts forward thinking into every project by identifying the design requirements early in the project development and coordinating with the appropriate parties and disciplines to ensure the project runs smoothly.
- ***Todd Beecher, P.E.*** has over 25 years of experience in the design, analysis, planning, and construction of electrical power, control, and instrumentation systems for the water and wastewater industry. Todd's wide variety of experience electrical design development for upgrades of existing power distribution system, pump stations, and switchgears will inform our team's work for the District. Some recent projects include the design of the new main for the South Bayside System Authority in Redwood City, Union

Sanitary District's substation replacement project in Union City, and Carmel Area Wastewater District's rehabilitation project in Carmel.

5.iii Project Management Approach

F&L has led the planning and design of over $200 million of infrastructure improvements since our founding in 1997. F&L is experienced with managing multi-disciplinary teams to deliver complex infrastructure improvement projects including projects that involve multiple potential permitting agencies. We understand the importance documenting all requirements of all potential jurisdictional agencies earlier in the conceptual design stages to ensure that project alternatives are properly developed. F&L will leverage our experience to develop the preferred alternative that can meet multi-jurisdictional requirements while delivering a cost effective project for the District. We understand the importance for regular communication to keep the District apprise of progress, upcoming work, submittal status, and overall project status. Communication between Jeff and the District will rely on both telephone and electronic mail communication.

5.iv Firm's Capacity

F&L and all of our subconsultants have assigned the key staff with the correct technical experience to develop the Study. All staff are committed to deliver their assigned tasks in accordance with the proposed schedule and the estimated level of effort as further described in Section 10 and the separate attachments.

5.v Unique Qualifications

F&L and our team of subconsultants have an extensive history of working together to successfully deliver a wide range of infrastructure projects including pump stations, storage tanks, and distribution systems. We have delivered projects in both rural and urban areas including developing cost effective solutions for projects with multiple constraints including limited right of way, challenging topography, and tight schedules. We have created a design development and execution process that engages the owner throughout the process while still delivering high quality contract documents.

F&L will also leverage our current experience with the District on the Cross Country Pipeline Reconstruction Study and Foreman Grading projects to deliver a project that conforms with the District's standards while reducing overall implementation risks. We have benefited from the last 10 months of collaborating with all of the District staff and we will utilize the knowledge and experienced gained to provide the District with the proposed solution that delivers the most cost effective and resilient project while integrating the expanded customer base into the District's current standard operating procedures.

Finally, we understand the critical balance of technical and non-technical criteria including the constraints that a project with Federal Emergency Management Agency (FEMA) funding that must be carefully reviewed and understood when recommending solutions. It is possible that the most cost-effective solution from both a capital and operating expenditure perspective may result in some portions of the project not being FEMA reimbursable. We will review and discuss potential funding constraints with the District to ensure that if non-FEMA reimbursable components are integrated into the Project solution that the District is fully informed to make the critical project scoping decisions.

6 Experience and Past Performance

6.i Experience

The F&L team has extensive experience with new pipeline, pump station, and storage tank capital improvement projects. Our experience throughout the area includes dense, urban settings and more rural neighborhoods, which allows our designers to anticipate challenges unique to each environment. We will leverage our design and construction experience to develop an implementation plan that focuses on data gathering and evaluation during preliminary design and constructability reviews during detailed design to deliver a comprehensive set of construction documents.

F&L's water distribution system experience includes planning, design, construction management, and project/program management services. The full-project life experience allows our engineers to incorporate multiple design criteria including required system pressures and flows, pipe materials, construction methods, and potential public impacts (both near-term and long-term) to present the utility owner with multiple potential solutions while also identifying the preferred solution. Our team's experience includes:

- Stanford University Water System Capital Improvement program that includes the design and construction of water transmission and distribution main replacement throughout the Stanford campus and includes coordination with multiple jurisdictions including City of Palo Alto and Santa Clara County.
- North Coast Water District Vallemar Tank Condition Assessment project included visual inspection of the existing tank, site evaluation, and recommendations for both retrofitting the existing tank and replacement of the tank on the existing site.
- Treasure Island Stage 2/3 Infrastructure Improvements that includes over 60 acres of infrastructure improvements including both water distribution and emergency fire water distribution systems plus pump stations, and;
- Mission Bay South Redevelopment that included over 40 acres of infrastructure improvements including both water distribution and emergency fire water distribution systems.
- Presidio Trust Risk and Resiliency Planning including development of an Emergency Response Plan to meet the requirements of America's Water Infrastructure Act but also support the Trust's on going Long-Range Utilities Implementation Strategy;

Our key design partner, PSE, has extensive experience with the design of both welded and bolted steel tanks in accordance with applicable American Water Works Association (AWWA) design standards. A selection of the PSE team's tank experience between 2016 and 2021 includes:

- Newport Samaritan Reservoir (500,000 gallons)
- South Magee Reservoir (2,000,000 gallons)
- Monroe Reservoir No. 2 (850,000 gallons)
- SUB South Hill Reservoir (500,000 gallons)
- Vader Enchanted Valle Reservoir (250,000 gallons)

- Seaside Reservoir (2,000,000 gallons)
- Airport Reservoir (2,000,000 gallons)
- Redland Reservoir No. 3 (1,250,000 gallons)
- Kennydale 320 Zone Reservoir (1,290,000 gallons)

Our team has the necessary experience to collaborate with the District to streamline the design process to be able to meet the District's timeline for issuing the project for bid. Our design approach will focus on development of critical design criteria to facilitate the

6.ii Project Examples

This Section presents the F&L team's experience with similar projects.

Project Reference 1: Hydro-Pneumatic Tank Replacement Project

Reference	Budget	On Schedule?	On Budget?
Avram Pearlman Engineer North Marin Water District Phone: (415) 272-0079 Email: apearlman@nmwd.com	$150,000	Yes	Yes

Description: F&L is performing a multi-phased project to assist the North Marin Water District (NMWD) to evaluate the potential solutions to replace seven existing hydro-pneumatic tank systems that have operated for over 30 years and have reached the end of life. In some cases, the original systems included buried pressure tanks that are not accessible and have never been maintained due to restricted site access. The first phase included condition assessment of all seven systems and identifying potential conceptual solutions to replace the hydro-pneumatic tanks systems with skid mounted pump stations. F&L also explored the potential opportunities for pressure zone consolidation to allow for some or all of the existing systems to be served by a nearby gravity tank. The initial phase identified the three highest priority systems to be replaced.

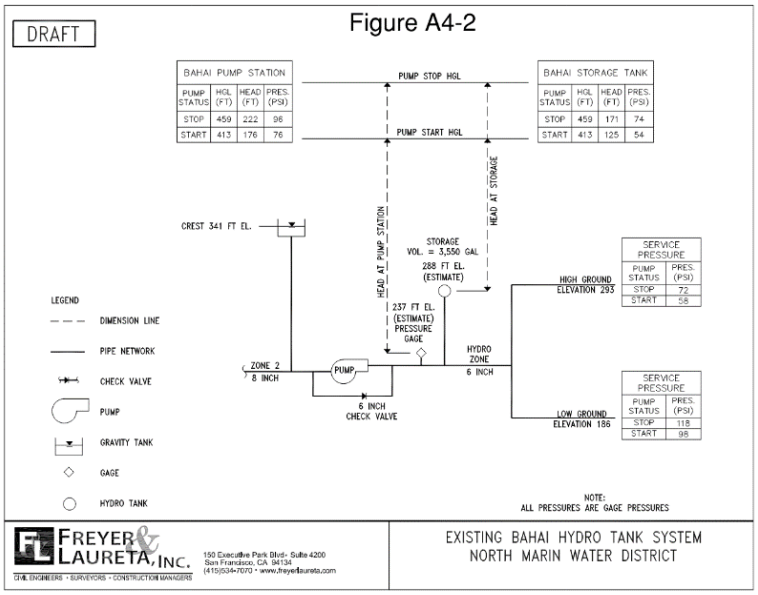

F&L is advancing the preliminary design of the three high priority systems including performing a long-term cost benefit analysis to determine if replacement with a skid mounted pump station would be more beneficial then construction of several thousand feet of transmission main to facilitate zone consolidation. The preliminary design includes mechanical, civil, electrical, instrumentation, and controls. We are also evaluating potential site improvements to minimize disruption to existing housing developments.

Project Reference 2: Great Oaks Water District Engineer

Reference	Budget	On Schedule?	On Budget?
Jared Ajlouny Vice President of Operations Phone: (408) 227-9540 Email: jajlouny@greatoakswater.com	$150,000	Yes	Yes

Description: F&L provides district engineering services for the Great Oak Water District in San Jose, which serves over 40,000 customers. F&L's services include hydraulic evaluation of the existing distribution system to confirm available fire flow to support new development applications. F&L utilizes EPANet to perform hydraulic modeling and provides fire flow availability reports documenting available fire flow. If sufficient fire flow is not available, F&L identifies the potential capital improvements that may be implemented by the developer to improve fire flow availability.

F&L also provides engineering services related to improving distribution system components to support the proposed development. The engineering services include design of new drinking water well connections, main extensions, and providing engineering supporting documentation for new well permitting from the Division of Drinking Water. F&L produces construction documents, opinions of probable cost, and provides supporting technical information to assist Great Oaks with securing permits for the new wells.

Project Reference 3: Laguna Honda Hospital Water Tank Replacement

Reference	Budget	On Schedule?	On Budget?
Paul Cooper, AIA Principal TEF Design Phone: (415) 596-8705 Email: paul@tefarch.com	$300,000	Yes	Yes

Description: F&L and PSE are part of the design team for the project to complete site improvements and tank replacement for a 300,000 welded steel tank that serves Laguna Honda Hospital (LHH)in San Francisco, California. LHH is served by two, 300,000 gallon tanks but Tank 1 has been determined to have experienced more sever corrosion increasing the risk of catastrophic failure of the tank if not replaced. The two existing tanks are located on an elevated site immediately adjacent to several public trails within a heavily forested site. The tanks are surrounded by eucalyptus trees including numerous trees that are in close proximity to the tanks resulting in limbs and other debris being deposited on the current flat roofs tanks. The public trails allow for easy access resulting in people camping and scaling the tanks

The Project included evaluation of the existing and future LHH demands including consideration of Office of Statewide Health Planning and Development (OSHPD) requirements for critical care

facilities to confirm the total storage required. The demand and OSHPD analysis, led by F&L, confirmed that the replacement tank should be 300,000 gallons to continue to provide LHH the flexibility of operating with one tank offline while maintaining the minimum OSHPD-required storage of 150,000 gallons at all times.

PSE is proving the structural design for the 300,000 gallon AWWA D100 welded steel tank and concrete foundation. The design effort included consideration of multiple tank roofs to address concerns such as people climbing the roof and potential for tree limbs and branches from falling on the roof. A knuckled roof was selected by LHH that included sufficient barriers to limit the ability for a person to scale the roof and is of sufficient slope that any branches or other debris would be cast of the roof without requiring LHH staff to access the roof.

F&L is providing civil and mechanical design including evaluating the overall constructability of the proposed improvements. The new tank must be constructed within the same footprint of the existing tank but the new tank will have a larger diameter and deeper foundation. To accommodate the modified tank layout, a detailed site review of existing buried utilities was required to identify any utility relocations that must be performed. In addition, adequate separation from Tank 2 that will remain is required to facilitate Tank 1 foundation construction without impacting Tank 2. Finally, the two tanks operate with similar water surface elevation and the new Tank 2 will be taller with modified roof design to allow for sufficient freeboard to accommodate the predicated sloshing height during a seismic event. All interconnecting pipes must be replaced to provide the necessary hydraulic relationship between the two differing height tanks to allow both tanks' water surface elevations to match.

7 Exceptions to this RFP

F&L has fully read the RFP and does not take any exceptions to the project goals but we have developed our Scope of Services presented in Section 8 based on the following key assumptions:

- Permit fees are not included;
- The new storage tanks will either be bolted steel or welded steel.
- The bolted or welded tank will be a performance based design criteria;
- The bolted or welded tank will be located at the Forest Springs site and no tank will be required within the Bracken Brae community because the proposed booster pump station will include a hydropneumatic system to meet daily demands;
- The District selected construction contractor will be responsible for final signature of the County and CalTrans encroachment permits; and
- The District will complete its review of submittals within 10 business days.

8 Contractual Scope of Services

As requested in the RFP, F&L has developed a detail scope of services including identifying the anticipated deliverables and key assumptions. The scope of services serves as the basis for our team's estimated professional services fee.

Task 1: Project Management

F&L will provide project management services including preparing monthly invoices. F&L's project manager will coordinate with the District to manage the agreement and provide monthly progress updates. F&L's project manager will also meet biweekly with the District's project manager to review progress to date, discuss work planned for the follow two weeks, and resolve any questions from the District team.

F&L will also develop a quality assurance and quality control (QA/QC) plan that will identify the QA/QC officer's roles and responsibilities, steps for integrating QA/QC into the deliverable schedule, and design resolution process to address the QA/QC comments. The QA/QC plan will be continually reviewed throughout the project life and modified, as required, to accommodate modifications to design procedures.

Deliverables

1. Monthly Invoices
2. Monthly Progress Reports
3. QA/QC Plan

Task 2: Preliminary Design

The F&L Team will develop a Basis of Design (BOD) Report for the proposed Project. The purpose of the BOD Report is to document key information including:

- Project goals and objectives;
- Document key design criteria for both the pipeline and tank improvements;
- Evaluate potential alternative tank sizes and layout;
- Develop final hydraulics and sizing for the booster pump station;
- Present preliminary pipeline alignment and profiles as well as booster pump station and tank layout;
- Develop preliminary details for two bridge crossings;
- Document necessary instrumentation and controls;
- Develop preliminary opinions of probable construction cost; and
- Other key information that was considered during preliminary design.

To support development of the BOD, the F&L team will provide the following tasks;

- Perform topographic for the area of the proposed pipeline alignments including:
    - Elevation points to develop 1-foot contours for the existing roadway width including 20 linear feet outside of the approximate alignment;
    - Top of curb, flow line, back of sidewalk (if exists), edge of pavement, and approximate roadway centerline elevations every 100 feet;
    - Private fence, landscape, and other visible above grade site features located within the right of way;

  - Surface expression of utilities and other visual indications of utilities within the right of way including any visible USA markings will be captured;
  - Locate, if visible, all water meters;
  - Incorporate existing utility information provided by the District and third-party utility owners; and
  - Develop a base map for the construction drawings.
- Perform geotechnical investigation including:
  - One and half days of field investigation including drilling between five to seven borings to a depth between 10-feet below ground surface (ft bgs) and 20-ft bgs unless drill rig refusal is encountered.
  - All borings will be performed outside of CalTrans right of way.
  - Soil samples from the borings will be collected utilizing the Standard Penetration Test Split Spoon Sampler and/or California Modified Sampler methods with samples collected at 2.5 to 5-foot intervals. Blow counts will also be recorded. Groundwater levels will be measured in the borings.
  - Laboratory testing of all soil samples will include but not limited to moisture content, dry soil, density, sieve analyses, and Atterberg Limits.
  - Laboratory testing of five soil samples to identify the potential risk of increased disposal costs will also include environmental analysis for VOCs/TPH-gasoline (EPA Method 8260), Multi-range hydrocarbons (EPA Method 8015), OC Pesticides (EPA Method SW8081A), CAM 17 Metals (EPA Method 200.8/6020), and, if required, STLC/TCLP (Methods E218.6/SW6020).
  - A geotechnical report will be prepared to present the results of the field and laboratory investigations including geotechnical design.
- F&L will engage a subconsultant to perform utility potholing that may be required to identify potential utility conflicts. The potholing effort will include
  - Securing a County encroachment permit,
  - Securing a CalTrans encroachment permit;
  - Providing two flag men for traffic control;
  - Perform potholes using a vacuum to depth not to exceed five feet; and
  - Backfill potholes with hot mix asphalt;
- Prepare pipeline preliminary design including;
  - Plan alignment including identifying separation of existing utilities to remain;
  - Profile identifying separation for existing utilities to remain;
  - Bridge crossing details;
  - Location for reconnecting existing water services for an alternative alignment within the Forest Park neighborhood; and
  - Standard details
- Prepare booster pump station site preliminary design including

  - Site evaluation identifying with proposed layout including potential additional area for future expansion to support the consolidation of the Big Basin Mutual Water company;
  - Site plan with layout of pre-engineered building;
  - Structural design criteria; and
  - Standard details
- Prepare tank site preliminary design including
  - Site evaluation identifying feasible alternative tank sizes to consider increasing available storage capacity;
  - Site plan with layout of alternative tanks;
  - Structural design criteria; and
  - Standard details
- Develop Opinions of Probable Construction Cost (OPC)

The F&L team will prepare the draft BOD Report incorporating the items described above with suggestions for the optimum booster pump station site and operational strategy. We will prepare for and facilitate a technical review workshop with the District to review the draft BOD Report. The F&L team will prepare response to District comments and issue a final BOD report.

Deliverables

1. Topographic survey in PDF format
2. Geotechnical report
3. Utility pothole report
4. Draft BOD Report
5. Technical Review Workshop Agenda and Minutes
6. Response to Comments
7. Final BOD Report

<u>Task 3: Final Design</u>

The F&L Team will prepare Construction Documents (CDs) to document the proposed pipeline, booster pump station, and tank improvements. The CDs will include detail structural design for two bridge crossings to be able to facilitate review and approval by CalTrans.

The F&L Team will prepare drawings and technical specifications for the District's use is soliciting bids. We will assist the District to prepare bid documents using the District's standard general specifications. F&L will provide the following tasks:

- Prepare Construction drawings including;
  - Cover Sheet
  - General Notes, Legend, and Abbreviations
  - Erosion Control Plan
  - Pipeline Plan and Profile
  - Booster Pump Station Plan
  - Booster Pump Station Elevations
  - Tank Plan

  - Tank Elevations
  - Standard Details
- Prepare technical specifications including;
  - Division 1 – General Requirements
  - Division 2 – Existing conditions
  - Division 3 – Concrete
  - Division 5 – Metals
  - Division 9 – Finishes
  - Division 13 – Fabricated Engineered Structures
  - Division 26 – Electrical
  - Division 27 – Communications
  - Division 31 – Earthwork
  - Division 33 – Utilities (including the bolted or welded steel tank performance specification)
- Prepare OPC Updates

The F&L Team will implement a performance based design for the bolted or welded steel tank design. The CDs will include detailed design for the foundation with tank layout and elevations to establish minimum requirements for the contractor. The structural drawings and technical specifications will include critical design and performance criteria that will be used by the tank manufacturer to develop final shop drawings.

The F&L Team will prepare CD submittal at the 60%, 90%, 100%, and Final design levels Following the 60% and 90% design submittals, the F&L Team will facilitate a design review workshop to present the 60 % and 90% design submittals to District staff and solicitate feedback. F&L will prepare a meeting agenda and provide meeting minutes that will include written response to comments.

The F&L Team will also review and provide responses to the District's comments on the 100% submittal. We do not anticipate the need for a design workshop with the 100% submittal. The purpose of the Final Design submittal will be to perform final coordination with the District prior to issuance of the bid documents.

With the 90% submittal, the F&L Team will prepare encroachment permit applications from both the County and CalTrans. We will review and respond to up to two rounds of comments from the County and CalTrans to allow for the permits to be ready for signature by the District's selected construction contractor. The Final Design submittal will incorporate any changes required based on County and/or CalTrans comments.

Deliverables

1. 60% design submittal including Plans, Specifications, and OPC in PDF format
2. 60% design workshop agenda and minutes in PDF format
3. 90% design submittal including Plans, Specifications, and OPC in PDF format
4. 90% design workshop agenda and minutes in PDF format
5. 100% design submittal including Plans, Specifications, and OPC in PDF format
6. Written Response to 100% Submittal Comments
7. Final Design Submittal in PDF format
8. County Encroachment Permit Application

9. CalTrans Encroachment Permit Application

Task 4: Bidding Phase

F&L will provide bid support including the following:

- Prepare for and attend one pre-bid meeting including preparing a meeting agenda.
- Manage the meeting sign in sheet.
- Prepare meeting minutes.
- Prepare one addendum, if needed, for the Project including a draft submittal to the District.

Deliverables

1. Prebid meeting agenda
2. One draft addendum in PDF format
3. One final addendum in PDF format

Task 5: Construction Phase

F&L and our subconsultants will provide Engineering Services During Construction including the following:

- Review and response submittals.
- Review and response requests for information (RFI's).
- Perform up to five site visits.
- Review and provide technical comments for change order request from the District's contractor.
- Prepare Record Drawings based on Contractor provided redlines

Additional assumptions by individual team member for the activities described above are included in the estimated fee table presented in Section 10.

Deliverables

1. Submittal Review Letters in PDF format
2. RFI responses in PDF format
3. Record Drawings in PDF and ACAD format

9 Insurance

F&L can meet all of the insurance requirements identified in the RFP.

10 Proposed Total Professional Fee and Schedules

10.i Proposed Fee

The F&L team's proposed level of effort, hourly rates, and not-to-exceed budget is presented in Table 10-1 included as a separate attachment per the RFP requirements.

10.ii Project Schedule

The F&L team has developed a project schedule to deliver the bid documents including highlighting key points for engaging the District. The proposed project schedule is included as with the fee proposal included as a separate attachment.

Appendix A
Key Personnel Resumes

FREYER & LAURETA, INC. CIVIL ENGINEERS · SURVEYORS · CONSTRUCTION MANAGERS

Jeffrey J. Tarantino, P.E.
Vice-President

Education: Bachelor of Science in Civil Engineering
Santa Clara University

Professional Qualification: Registered Civil Engineer – California No. 63936

Mr. Tarantino has extensive experience in civil engineering design and construction that has been developed during his 20 years of civil and environmental work experience. Mr. Tarantino has served as project manager on numerous program management, planning, design, permitting and construction management projects. His project experience includes civil site development, water supply treatment and distribution , wastewater treatment and collection, water reuse treatment and distribution, flood control , groundwater extraction and treatment systems, and water quality. Mr. Tarantino serves as the primary point of contact with permitting and environmental resources agencies on behalf of clients to facilitate open dialogue with the agencies. Mr. Tarantino has demonstrated a unique ability to assist clients to bridge technical and non-technical challenges to deliver multi-beneficial projects within budget and on schedule. A representative sampling of past and current projects includes:

Development and Campus Projects

UCSF, Minnesota Street Student Housing
UCSF, Campus Wide Technical Criteria Development
1000 Channel Street (SF) Owner, One Mission Bay
Uber Headquarters, 1455 and 1515 Third Street
TNDC, Candlestick Block 10A
Alexandria Real Estate Equities (ARE), 1450 Owens
UC Berkeley, Berkeley Way Project
UCSF, Weill Institute for Neuroscience
Mission Bay, Park P2-P8
Mission Bay, Park P3
TNDC, 681 Florida Street
ARE, Confidential Site (San Mateo County

Infrastructure Projects

City of Burlingame, Water Distribution
Valley of the Moon Water District, Water Distribution
City of Calistoga, Water Treatment
Mission Bay, Wastewater Collection
City of Pacifica, Wastewater Collection
Town of Hillsborough, Creek Stabilization
UCSF, 2nd Parcel Infrastructure
Town of Hillsborough, Water Distribution
City of San Mateo, Wastewater Collection
Coastside County Water District, Water Distribution
City of Burlingame, Storm Drain Collection
City of Pacifica, Stormwater Collection
City of San Mateo, Stormwater Collection
UCSF, Surcharge Removal

Environmental Projects

SLAC National Laboratories, Groundwater Treatment
Aircraft Service International Group, Groundwater Treatment
City of Emeryville, Soil Remediation
Peninsula Open Space Trust, Soil Remediation

Phone: 415-534-7070
Fax: 650-344-9920
E-mail: tarantino@freyerlaureta.com

150 Executive Park Boulevard, Suite 4200
San Francisco, CA 94134

Richard J. Laureta, P.E.
President

Education: Bachelor of Science in Civil Engineering
California Polytechnic State University, San Luis Obispo

Professional Qualification: Registered Civil Engineer – California No. 55783
Registered Civil Engineer – Hawaii No. 10545

Mr. Laureta has broad experience in civil engineering design and construction. In his 25 years of professional engineering experience, he has participated in the design, project management, and construction coordination of private sector engineering projects, as well as city, county, state and federal rehabilitation projects. His broad experience gives him the knowledge necessary to be an integral part of multi-disciplined teams in the planning, design and installation of challenging civil engineering projects. Mr. Laureta has a growing reputation in urban master planning and wastewater collection design and construction management. He serves as the District Engineer for the West Bay Sanitary District in Menlo Park and the East Palo Alto Sanitary District. The combination of his design experience and his expertise in computer-aided drafting ensures accurate design drawings. His experience and dedication to the profession allows him to be a contributor to the success of diverse engineering projects. A representative sampling of past and current projects includes:

District Engineer/Public Works Projects
West Bay Sanitary District, District Engineer
East Palo Alto Sanitary District, District Engineer
Silicon Valley Clean Water, Conveyance System
City of San Leandro, Wastewater Collection Systems
City of Burlingame, Storm Drain Collection Systems
University of San Francisco, Misc. Projects

Office/Commercial/Residential Projects
Britannia Oyster Point, South San Francisco
Hercules Properties PUD, Hercules
McGrath Rentcorp Offices, Livermore
Childrens' Center, NAS North Island, San Diego
Marriott Courtyard, So. San Francisco
Bay West Cove, So. San Francisco
Sutro Tower Improvements, San Francisco

Infrastructure Master Planning and Design
Mission Bay Residential Area
Mission Bay Park NP 1-2 Project
Mission Bay Park NP 3-5 Project
Mission Bay Park P16
Mission Bay Drive and Circle Project
Mission Bay Blocks 29 - 32 and 33 - 34
Utility Master Plan, South of Channel

Roadway and Infrastructure Projects
Naval Training Center Drainage Design, San Diego
Rankin Pump Station Design, San Francisco
Ralston Avenue Grade Separation, Belmont
Special Weapons Area Pump Station, NAS North Island
Pier 45 Seismic Retrofit, San Francisco
Guadalupe River Retaining Walls, San Jose
Bollman Water Treatment Plant Expansion, Concord

Phone: 415-534-7070
E-mail: laureta@freyerlaureta.com
150 Executive Park Blvd., Suite 4200
San Francisco, CA 94134

FREYER & LAURETA, INC. CIVIL ENGINEERS · SURVEYORS · CONSTRUCTION MANAGERS

Jason J. Feudale
Associate Engineer

Education: Bachelor of Science in Civil Engineering, California State University Chico

Mr. Feudale has 15 years of experience in municipal and construction engineering. The experience he has gained in grading, drainage, erosion control, and utility design provides Freyer & Laureta a high level of independent and efficient production of civil engineering construction documents. Mr. Feudale has also gained a great deal of experience in construction inspection. He serves as the construction inspector for both the West Bay Sanitary District and the East Palo Alto Sanitary District, and Erosion Control Inspector for the town of Portola Valley. Past engineering project experience includes:

Infrastructure Planning and Design

Blocks 11-12 Public Infrastructure, San Francisco
Illinois Pump Station, East Palo Alto
Stowe Lane Pump Station, San Mateo County
Foothills Park Maintenance and Parking Lot, Palo Alto
Neighborhood Storm Drain Project # 1, Burlingame
Neighborhood Storm Drain Project # 2, Burlingame
2010 Sanitary Sewer Improvement Project, East Palo Alto
West Bay Sanitary District Offices Building, Menlo Park
Britannia Oyster Point, So San Francisco
Village Square Pump Station, Portola Valley
Sewer Pipe line Replacement, San Leandro
Sewer Point Repair, San Leandro
Wicks & Blue Dolphin Pump Stations, San Leandro
Menalto Pedestrian Improvements, Menlo Park
Sewer Trunkline Realignment, East Palo Alto
West Bay Sanitary District Belle Haven, Menlo Park

Construction Management and Inspection

Kebcenell Residence Drive Way, Portola Valley
Peak Lane Grinder Pump Force Main, Portola Valley
Cervantes Road Grinder Pump Force Main, Portola Valley
Westridge Drive Sewer Project, Portola Valley
Pope Street Emergency Sewer Project, Menlo Park
Los Trancos Sewer Project, San Mateo County
Sewer Trunkline Realignment, East Palo Alto
Veterans Hospital Sewer, Menlo Park
Royal Oak Sewer, Menlo Park
Lane Woods Sewer, Menlo Park
Heritage Oaks Sewer, Menlo Park
Morgan Lane Sewer I & II, Menlo Park
Gloria Way Well Treatment Project, East Palo Alto
Sewer Siphon Replacement, East Palo Alto

GIS Mapping

West Bay Sanitary District
East Palo Alto Sanitary District

Sanitary Sewer Flow Metering

East Palo Alto Sanitary District

Phone: 650-344-9901
Fax: 650-344-9920
E-mail: feudale@freyerlaureta.com

144 North San Mateo Drive
San Mateo, CA 94401

DAN PELUSO, P.E., G.E.

Senior Principal Engineer

CE&G
Pragmatic Expertise™

RELEVANT WATER EXPERIENCE

East Dunne Tank Geotech Engineering Investigation **Morgan Hill, CA**
Lead geotechnical engineer for investigation of site of new 850,000 steel water tank in problematic slope terrain, for City of Morgan Hill. Services included subsurface exploration on tank pad and along access road; laboratory testing of soil and rock samples; development of geotechnical design recommendations for tank foundation, soil nail walls supporting slope above the tank, access road and associated cantilever walls; and preparation of a design report. Considerations included weak bedrock interlayered with discontinuous hard/strong basalt layers, presenting both design challenges and potential for contractor change orders.

Hollister Wastewater Treatment Plant Expansion **Hollister, CA**
Provided geotechnical engineering support services for the City of Hollister Domestic Wastewater System Phase I Improvement project. The project included installation of 2,000 stone columns for mitigation of liquefaction potential. A Hilfiker retaining structure was also constructed as temporary support for a 27-foot deep excavation. Structures constructed or to be constructed include MBR Process Trains, MBR Membrane Tank, MBR Control Building, pre-treatment facilities, chemical building, chlorine contact building, operations building, and various pipelines and associated improvements.

Sunnydale Auxiliary Sewer Project **San Francisco, CA**
Geotechnical study for the extension of new sewer pipelines along Rutland Avenue and Schwerin Street installed by open cut stabilized with jet-grouting. The pipeline varies from 42-inch to 66-inch diameter. Performed field rising head permeability tests in the borings to characterize the groundwater conditions in the proposed tunnel profile.

El Toro Water Tank Access Road **Morgan Hill, CA**
Geologic and geotechnical study for the City of Morgan Hill for evaluation of unstable edge of access road and design for stabilization of roadway. Conducted a geotechnical investigation of a landslide/gully complex threatening the City reservoir, and of landsliding threatening the sole access road to the (steel tank) reservoir. Developed innovative, cost-effective approaches for both tight-access problem areas.

Brentwood Wastewater Treatment Plant Expansion **Brentwood, CA**
Project manager for a geotechnical investigation and engineering analysis for the expansion project at the Brentwood Wastewater Treatment Plant. Duties included review of previous geotechnical reports. The project increases the existing capacity of the pre-existing 5.0 MGD Wastewater Treatment Plant to 7.5 MGD in Phase II and eventually to 10.0 MGD in Phase III. Project includes adding an oxidation ditch, a secondary clarifier, tertiary filters, evaluating and selecting a disinfection process along with expanding disinfection capacity, adding additional belt filter presses, evaluating and selecting a biosolids dryer and all related appurtenances. CE&G services were provided as a subconsultant to RMC Water.

Upper Llagas Creek Flood Protection Project **Santa Clara Co., CA**
This project extends approximately 13.6 miles along existing creek channels and includes design of levees, floodwalls, and box culverts. The project will provide 100-year flood protection in the urban areas of Morgan Hill and San Martin as well as a 5-10-year flood protection in agricultural areas. The total estimated project cost is $95 million. Prepared a proposal jointly with URS Corporation for a geotechnical investigation, presented it to the Santa Clara Valley Water District and US Army Corp of Engineers, and negotiated the scope and fee. Coordinated and managed all field work that included more than 130 borings and 20 piezometers, which had to be accomplished in less than 6 weeks.

CERTIFICATIONS
CA Civil Engineer No. 49562
CA Geotechnical Engineer No. 2367

YEARS OF EXPERIENCE
34 (4 with CE&G)

EDUCATION
M.S., Civil Engineering (Geotechnical), San Jose State University, 1987
B.S., Geological Sciences, University of California at Santa Barbara, 1983

ACCOMPLISHMENTS
- Lecturer for Foundation Design at Santa Clara University
- Lecturer for Intro to Soil Mechanics at San Jose State University
- Peer review for municipal clients throughout the Bay Area
- Large bridge foundation design
- Expertise with Caltrans standards and requirements

KEVIN P. LOEB, P.G., C.E.G.

Senior Geologist

CE&G
Pragmatic Expertise™

RELEVANT EXPERIENCE

Water and Sewer Line Improvements **Hayward, CA**
Conducted and and managed geotechnical fieldwork and desktop studies to provide HydroScience Engineers with design and constuction recommendations for the replacement of up to 41 sewer and water line segments throughout the City of Hayward. The field work consisted of locating existing pipe lines and drilling and logging exploratory borings in the areas of the planned improvements. Borings were primarily located near planned trenchless crossings beneath railroad tracks and box culverts as well as direclty above the existing sewer lines in some areas to inspect existing overlaying fill to determine whether pipe bursting methods were feasible. Provided recommendations for open trench methods as well as tranchless pipe installations for pipe bursting, auger bore and jacking, guided auger bore, and micro tunneling.

SLVWD Water Main Replacement **Santa Cruz Co., CA**
Project geologist on of the replacement of five waterline segments, totaling approximately 17,300 lineal feet for San Lorenzo Valley Water District. Pipe replacement consisted of open trench methods. As a subconsultant to Schaaf & Wheeler, CE&G provided geotechnical recommendations for the design and construction of the pipelines. Services included subsurface exploration consisting of 15 borings along the pipeline alignments, which generally followed existing roadways. Engineering assessment included excavatability of soil and bedrock materials and shoring design recommendations.

Brackney Landslide Area
Pipeline Risk Reduction Project **Ben Lomond, CA**
Directed the geotechnical field exploration and assisted with engineering design services for the replacement of a segment of the City of Santa Cruz's public water pipeline identified for replacement due to potential landslide impact per FEMA. Analyses included site characterization, rock and soil slope stability, and constructability assessment of design alternatives. Completed the field exploration and a geotechnical design study for the project. Field investigations included: Seismic P-wave survey line, utility location survey, potholing, rock core and soil borings, downhole televiewer survey, falling head tests; environmental & corrosion testing, geotechnical index test for soil materials, rock and soil strength testing, and VWP installation and monitoring.

Coyote Percolation Dam **San Jose, CA**
Conducted and and managed geotechnical fieldwork and desktop studies to assist with design recommendations for the replacement of Santa Clara Valley Water District's Coyote Percolation Dam. Field investigations were performed under the over site of the Division of Safety of Dams (DSOD) and consisted of logging soil borings and installing and monitoring one vibrating wire piezometer and one standpipe minitoring well within the dam abutments. The geological desktop review and field data were used for engineering analysis to provide design and construction recommendations for a new rubber inflatable dam for Santa Clara Valley Water District.

Williams Treatment Plant Facilities **San José, CA**
Project manager and exploration geologist for a geotechnical investigation and engineering analysis for a new water treatment system project at the San José Water Company's Williams Treatment Facilities Plant. Work included characterization of soil and groundwater conditions in the project areas to provide geotechnical design recommendations for design and construction of new water treatment system stuctures, which included foundations for four storage tanks up to 45 feet in diameter, a series of PFAS treatment and weak acid cation softening vessels, a pump station, and various subgrade utility lines. CE&G services were provided as a subconsultant to Hazen & Sawyer.

CERTIFICATIONS
CA Professional Geologist No.9665
CA Engineering Geologist No. 2763
OSHA 40 Hour HAZWOPER

YEARS OF EXPERIENCE
7 (4.5 with CE&G)

EDUCATION
M.S., Geology, San José State University, San José, YEAR
B.S., Geology, California State University, Fresno, 2014

ACCOMPLISHMENTS
-Geologic and geotechnical investigations for public and private agencies
-Geologic mapping projects for landslide repairs
-Former project manager and field geologist for characterizing and analyzing soil, and groundwater at environmentally impacted sites
-OSHA Confined Space Safety Training
-OSHA Excavation Safety Training
-RCRA Hazardous Waste Training
-Former Geology Lab Instructor

GALIT RYAN, PE

Structural Principal-in-Charge

With over 25 years of water/wastewater industry experience, Galit serves as a Principal and staff manager in PSE's California office. Galit's expertise includes water and wastewater storage reservoir design and rehabilitation, including steel, reinforced concrete and prestressed concrete structures. Her project experience has included above-grade, partially-buried, and fully-buried structures. Roof types have included free span and column supported steel, flat-slab concrete, concrete dome, aluminum dome and floating roof covers. Her project expertise spans various site and geographic conditions, with special focus on high seismic areas, a wide variety of site conditions including sliding stability, and varying loading conditions including roofs designed to accommodate vehicular traffic and multi-use facilities above.

In addition to her vast experience with new tank structure design and construction, Galit's experience also includes seismic evaluation, condition assessments, and upgrades and rehabilitations of existing structures, as well as QA/QC and construction oversight. Having been involved in all phases of project delivery from evaluation and analysis, to design and through the completion of construction, Galit is able to provide our clients and owners with exceptional service and creative solutions, with concurrent focus on schedules and budgets. A key asset to any team, Galit's comprehensive experience with owners, contractors, and other consultants allow her the ability to quickly and efficiently solve or mitigate possible design coordination and construction issues.

Relevant Experience

South Magee 2.0 MG Water Storage Tank, *Temecula, CA*
PSE is serving as the Structural Engineer of Record for this new 2.0 MG water reservoir. Designed as a replacement for an existing 0.1 MG reservoir, the inside diameter will measure 125 ft with a maximum operating water level of 22ft and a steel framed roof supported by steel pipe columns. PSE analyzed the main structural elements of the reservoir, accounting for seismic slosh wave effects amongst other considerations and provided a complete stamped calculations package for permitting and construction.

Laguna Honda Hospital Water Tank Replacement, *San Francisco, CA*
PSE has been contracted to provide structural design services for a new tank to serve the Laguna Honda Hospital, located in the Midtown Terrace neighborhood of San Francisco. The new tank will replace the existing Water Tank II and is designed to be a ground-supported, steel storage tank with a capacity of 300,000 Gallons. PSE's scope of work includes structural design of the tank, foundation, anchorage, and structural detailing support for appurtenances, life-safety equipment, and access equipment. PSE is also working closely with the project team to coordinate and provide structural design guidance related to the tank siting, dimensions, security and aesthetics.

CVWD Tank Evaluation, *Coachella, CA*
PSE provided a seismic and structural evaluation of an existing 50,000 gallon tank for the Coachella Valley Water District, as the District desired to remove the tank from service and leave the structure in place as a landmark. PSE's evaluation identified seismic vulnerability issues and determined potential upgrades required for current code compliance. PSE performed an on site structural inspection and analyzed the tank and steel framed tower in conformance with ASCE 7. Findings and recommendations were documented in a report.

Helix Water District, Tunnel Hill Reservoir Upgrades, *El Cajon, CA*
PSE performed a seismic evaluation of the existing Tunnel Hill reservoir including an options analysis for upgrading the existing roof or replacing it with a new aluminum dome roof. PSE provided a structural evaluation and roof upgrade options, as well as seismic slosh, anchorage requirements and fall arrest systems. Following the District's preferred upgrade option, PSE designed the tank modifications to include a new aluminum dome roof and increased shell height for slosh.

EDUCATION

BS, Structural Engineering, University of California, San Diego

YEARS EXPERIENCE

26

REGISTRATIONS

Professional Engineer: AZ, CA, HI, ID, NV, OR, WA, WY

TRAINING

EPA Risk Assessment & Emergency Response Plan

MEMBERSHIPS

American Council of Engineering Companies (ACEC)

American Concrete Institute (ACI)

American Society of Civil Engineers (ASCE)

American Water Works Association (AWWA)

National Society of Professional Engineers (NSPE)

Structural Engineers Association

Water Environment Association (WEF)

American Public Works Association (APWA)

JOE WENDT, PE

Project Manager

Joe is a Project Manager at PSE with a demonstrated history of experience working on a variety of projects ranging from small to large-scale capital improvement projects for municipalities. He has completed numerous reservoir and pump station designs for both new structures and existing structure evaluations. Joe is well versed in seismic design and analysis, having successfully completed a wide variety of anchorage designs. Joe has a solid understanding of project needs from initial data gathering and review, to design and analysis, to permitting and construction support, including submittal reviews and on site observations. Joe puts forward thinking into every project by identifying the design requirements early in the project development and coordinating with the appropriate parties and disciplines to ensure the project runs smoothly.

Relevant Experience

South Magee 2.0 MG Water Storage Tank, *Temecula, CA*
PSE is serving as the Structural Engineer of Record for this new 2.0 MG water reservoir. Designed as a replacement for an existing 0.1 MG reservoir, the inside diameter will measure 125 ft with a maximum operating water level of 22ft and a steel framed roof supported by steel pipe columns. PSE analyzed the main structural elements of the reservoir, accounting for seismic slosh wave effects amongst other considerations and provided a complete stamped calculations package for permitting and construction.

Laguna Honda Hospital Water Tank Replacement, *San Francisco, CA*
PSE has been contracted to provide structural design services for a new tank to serve the Laguna Honda Hospital, located in the Midtown Terrace neighborhood of San Francisco. The new tank will replace the existing Water Tank II and is designed to be a ground-supported storage tank with a capacity of 300,000 Gallons. PSE's scope of work includes structural design of the steel tank, foundation, anchorage, and structural detailing support for appurtenances, life-safety equipment, and access equipment. PSE is also working closely with the project team to coordinate and provide structural design guidance related to the tank siting, dimensions, security and aesthetics.

CVWD Tank Evaluation, *Coachella, CA*
PSE provided a seismic and structural evaluation of an existing 50,000 gallon steel tank for the Coachella Valley Water District, as the District desired to remove the tank from service and leave the structure in place as a landmark. PSE's evaluation identified seismic vulnerability issues and determined potential upgrades required for current code compliance. PSE performed an on site structural inspection and analyzed the tank and steel framed tower in conformance with ASCE 7. Findings and recommendations were documented in a report.

Helix Water District, Tunnel Hill Reservoir Upgrades, *El Cajon, CA*
PSE performed a seismic evaluation of the existing Tunnel Hill reservoir including an options analysis for upgrading the existing roof or replacing it with a new aluminum dome roof. PSE provided a structural evaluation and roof upgrade options, as well as seismic slosh, anchorage requirements and fall arrest systems. Following the District's preferred upgrade option, PSE designed the tank modifications to include a new aluminum dome roof and increased shell height for slosh.

EDUCATION

MS, Civil Engineering, Portland State University

BS, Civil Engineering, Portland State University

YEARS EXPERIENCE

7

REGISTRATIONS

Professional Engineer: CA, OR

TRAINING

Post-Disaster Safety Assessment Program (SAP) Evaluator for Cal Office of Emergency Services (OES)

OSHA 2264 - Permit Required Confined Space Entry

MEMBERSHIPS

Structural Engineers Association

Beecher Engineering, Inc.

Todd Beecher, P.E.

President, Beecher Engineering, Inc.

Education

BSEE, Electrical Engineering

Cal Poly, San Luis Obispo 1992

Professional Registrations

Electrical-CA #14712

Electrical-ID #9099

Electrical-OR #18948PE

Electrical-UT #321174-2202

Electrical-WA #35366

Memberships

IEEE

Power Engineering Society

Experience

Todd has over 23 years of experience in the design, analysis, planning and construction of electrical power, control and instrumentation systems for the water and wastewater industry.

Recent Projects and References

South Bayside System Authority*-Power Reliability Improvements Project, Redwood City, CA*

Reference: Ms. Teresa Herrera, P.E. Phone: 650-591-7121

Responsible for the design of a new main 480 volt "main-main-tie-tie-main-main" switchgear line-up housed in a prefabricated, outdoor enclosure. The new switchgear equipment was provided as a change order to the "Power Reliability Improvements Project" and required equipment pre-purchase. Included in the design was an automatic circuit breaker interlocking scheme which provides automatic breaker position response based on the "best available power source". As part of the equipment procurement, multiple trips were made to Eaton's factory (Asheville, NC) and a visit to the outdoor enclosure manufacturer (IBI in Caldwell, ID) to ensure that the new switchgear was manufactured correctly and operating as specified. A detailed factory functional testing script was developed and followed during both the factory visits to Eaton and again as a final functional test once the equipment installation at the site was completed. The new switchgear was put into operation in February 2014.

Union Sanitary District*-Substation 1 Replacement Project, Union City, CA*

Reference: Mr. Chris Pachmayer, P.E., Phone: 510-477-7608

Provided engineering assistance during construction for the replacement of the plant's main 480 volt switchgear line-up. Duties included engineering design during construction for the implementation of circuit breaker interlocks related to the plant's existing standby generator units, field inspection during multiple nighttime shutdowns and factory witness testing (Burlington, IA) of the new 480 volt switchgear equipment provided by General Electric Company. Construction was completed in July 2012.

Alpine Summit Development, LLC

1852 W. 11th Street, Suite 266
Tracy, Ca 95376
(925) 605-6762
Aarons@alpinedevelop.com

Aaron Smud

BACKGROUND QUALIFICATION

With over twenty years of construction experience as an estimator and project manager on numerous project types including water infrastructure, wastewater, storm drainage, site grading, natural gas pipeline, roadways, environmental, and minor structures. Role of experience includes developing resource loaded definitive construction cost estimates, constructability reviews, mean and methods, value engineering, contract negotiation, change orders estimating and cost validation that all lead to successful project delivery. Versed in developing and negotiating proposals within project teams for Design-Bid/Build, CM/GC, Alliance, and other bid delivery methods. Background includes extensive involvement in all aspects of civil construction including, estimating, project management, project startup, submittals, subcontracts, scheduling, project sequencing, change controls and negotiations.

Substantial field experience, has provided a thorough understanding of construction equipment capabilities, realistic production rates, the importance of safety, and the significance of a high quality product. This hands on experience and knowledge has allowed for the highest level of construction support.

Areas of Expertise:

- **Municipal Pipeline** - *Numerous sizes and material types up to 144" Waterlines, recycled waterlines, gravity sewer, force mains, storm drains, natural gas, and rehabilitations*
- **Mechanical & Structural** - *pump stations, water storage tanks, treatment plants, outfall structures, flow diversion, pressure regulation, existing facility replacements and rehabilitations*
- **Trenchless Methods** - *Augur bores, microtunneling, HDD, CIPP, sliplining, and pipe bursting*
- **Hydroelectric and Energy** - *Penstock pipelines, forebays, afterbays, turbine generator equipment, powerhouse building, transmission electrical, and solar generation*
- **Private Development –** *Residential, commercial, industrial, landfills, rail, and airports*
- **Environmental** - *wetland mitigation, fish structures, riprap placement, and MSE structures*
- **Shoring and Shafts** - *Complex shoring systems for trenching and shafts. Secant piles, sheet piling slide rail, beam and plate, lagging, slurry walls, soil nails, and other*

Select Project Experience:

- **Willamette Water Supply Program PLW 2.0 - Hillsboro, OR; $64,681,000**
  Transmission waterline program that will increase capacity and service area. Large diameter steel finished water pipeline with a total approx. footage of 17,167 LF. The pipeline is mostly 48" WSP diameter waterline and included appurtenances such as blow-off valves, air release valves, pipeline drains, turnout structures, and major modifications and expansions to an existing PRV facility. It also included extensive traffic control, site work, mechanical improvements, surface restoration and trenchless crossings.

- **City of Fort Bragg Raw Water Project, - Fort Bragg, CA; $6,480,135**
  Approximately 11,696 LF of 10" raw water pipeline from the Summers Reservoir to the WTP. The project is mostly an offset replacement of an existing failing asbestos pipeline. Most of the pipeline ROW is cross country requiring extensive ROW clearing, tree trimming/protection, grading, erosion control, creek crossings, and re-vegetation. Much of the project is located within or near Environmental Classified Costal Zones that required comprehensive biologic surveys, studies, timber harvest plan, and extensive permitting.

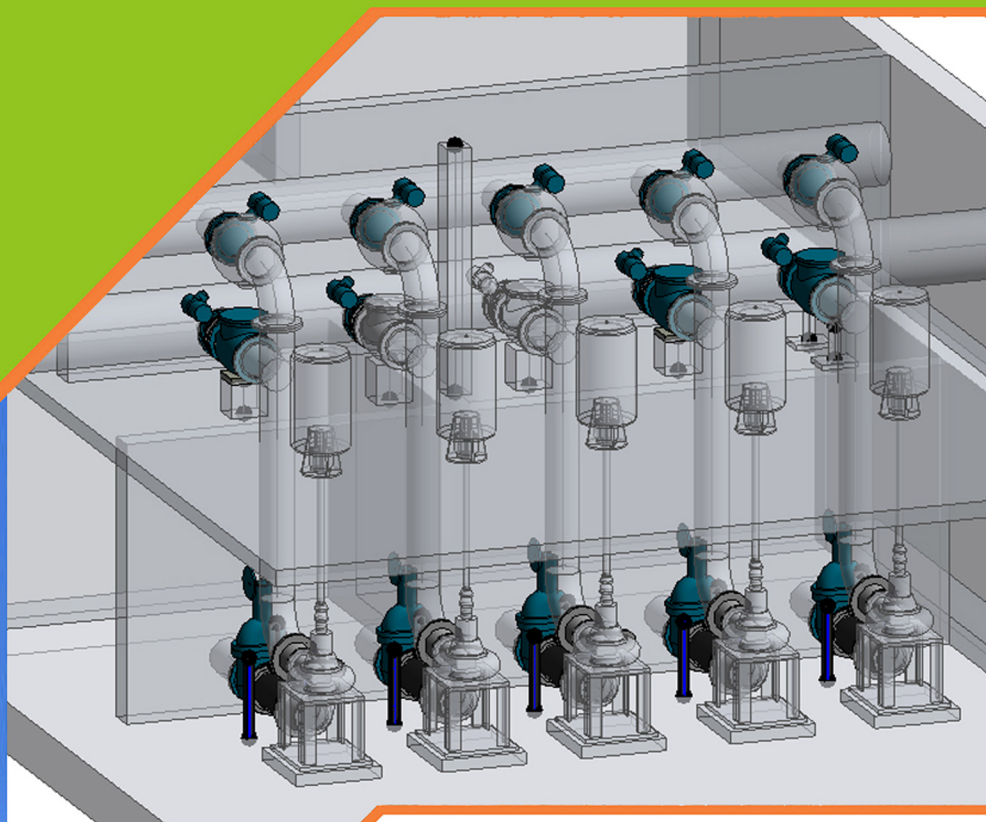

150 Executive Park Blvd.
Suite 4200
San Francisco,CA 94134
(415) 534-7070

505 San Marin Dr.
Suite A220
Novato, CA 94945
(415) 534-7070

825 Washington St.
Suite 237
Oakland, CA 94607
(510) 937-2310

www.freyerlaureta.com

FREYER & LAURETA, INC.
Civil Engineers – Surveyors – Construction Managers

FREYER & LAURETA, INC. CIVIL ENGINEERS • SURVEYORS • CONSTRUCTION MANAGERS

February 24, 2022

Mr. Josh Wolff, P.E.
District Engineer
San Lorenzo Valley Water District
13060 Highway 9
Boulder Creek, CA 95006

RE: Cost Proposal for Professional Design Services
Bracken Brae and Forest Springs Mutual Water Companies Consolidation Project
San Lorenzo Valley Water District, Boulder Creek, California

Dear Josh,

Freyer & Laureta, Inc. (F&L) is pleased to submit this cost and schedule proposal to the San Lorenzo Valley Water District (District) as a supplement to our Proposal submitted under separate cover. We have developed our proposed fee and schedule based on F&L's Project Understanding including our proposed scope of work.

The attached table provides our team's proposed time and materials fee by task and by person. Also attached is F&L's Charge Rate Schedule dated January 1, 2022 proposed for the Project. The attached GANTT formatted schedule includes our team's proposed approach including identifying District submittal review activities.

Please contact me at (650) 619-3226 or tarantino@freyerlaureta.com with any questions on our cost proposal.

Sincerely,
FREYER & LAURETA, INC.

Jeffrey J. Tarantino, P.E.
Vice President

Headquarters:
150 Executive Park Blvd, Suite 4200
San Francisco, CA 94134
Tel: (415) 534-7070
www.freyerlaureta.com

North Bay Office:
505 San Marin Drive, Suite A220
Novato, CA 94945
Tel: (415) 534-7070

East Bay Office:
825 Washington Street, Suite 237
Oakland, CA 94607
Tel: (510) 937-2310

TABLE 10-1
BUDGET ESTIMATE FOR PROFESSIONAL DESIGN SERVICES FOR CONSOLIDATION OF
CONSOLIDTION OF THE BRACKEN BRAE AND FOREST SPRINGS MUTUAL WATER COMPANIES
San Lorenzo Valley Water District

TASKS	ESTIMATED LABOR (Hours) (1)													TOTAL LABOR COST ($)	OTHER DIRECT COSTS				ESTIMATED COST (2)	
	F&L				PSE			BE	CE&G				AD		UNIT	QNTY	UNIT COST ($)	10% MARKUP ($)	TOTAL COST PER ITEM ($)	SUB TOTALS ($)
	Clerical	Staff Engineer II	Staff Engineer IV	Principal	Staff Engineer	Senior Project Manager	Principal	Principal	Senior Principal Engineer	Senior Geologist	Project Engineer	Senior GIS/CADD Specialist	Principal							
	90	140	160	240	187	240	275	231	319	231	193	165	204							
Task 1: Project Management and Coordination																				
General management including invoicing	16			8										$3,360					$3,360	
Bi-weekly Progress Meetings with District				24										$5,760					$5,760	
Develop Project QA/QC program				8										$1,920					$1,920	
Coordination with District				16				8						$5,688					$5,688	
Subtotal Labor Hours - Task 1	16			56				8						**$16,728**	Estimated Cost - Task 1					**$16,700**
Task 2: Preliminary Design Phase																				
Topographic Survey (Ifland; lump sum)		4												$560	ls	1	$52,000	$5,200	$57,760	
Right of Way Mapping (Ifland, lump sum)		4												$560	ls	1	$20,000	$2,000	$22,560	
Existing Utility Research and Coordination		24	4											$4,000					$4,000	
Prepare Base Map		40	8											$6,880					$6,880	
Geotechnical Investigation																				
Prepare for field work									4	19	2			$6,050	Uti/TCP	1	$2,313	$231	$8,594	
1.5 Days of Field work (inc. drill and traffic control subs)											16			$3,080	Subs	1	$8,495	$850	$12,425	
Lab analysis									2	1	6			$2,024	Lab	1	$2,479	$248	$4,751	
Report									8	22	18	8		$12,419					$12,419	
Utility Potholing (Allowance)		4												$560	ls	1	$25,000	$2,500	$28,060	
Site Visit (One Day) inc. field report		8	8	8	6	10	1						10	$10,150	Day	1	$600	$60	$10,810	
Draft Basis of Design Report																				
Prepare Structural Design Criteria Summary					16	6	2							$4,981					$4,981	
Prepare tank storage volume alternatives review		24	8	2				8						$6,968					$6,968	
Prepare Pump Station Design Criteria Summary		24	8	2										$5,120					$5,120	
Develop pipeline alignment plan view		120	80											$29,600					$29,600	
Develop Pump Station Site Plan		80	40					8						$19,448					$19,448	
Develop Pump Station Mechanical Piping		40	24											$9,440					$9,440	
Develop Instrumentation and Controls Strategy			8					24						$6,824					$6,824	
Prepare opinion of probable cost		8	4		4	1	1	4					26	$9,238					$9,238	
Prepare preliminary project schedule			4					4						$1,564					$1,564	
Internal Review				8										$1,920					$1,920	
Prepare submittal		8	2					4						$2,364					$2,364	
Technical Review Workshop			4	4		4		4						$3,483					$3,483	
Prepare Response to Comments		8	4		4	2	1	4						$4,187					$4,187	
Prepare Final Basis of Design		8	2	1	2	1	1	4						$3,493					$3,493	
Coordination with CalTrans		16	8	4	2	1	1							$5,369					$5,369	
Coordination with District				8										$1,920					$1,920	
Subtotal Labor Hours - Task 2		420	216	37	34	25	7	64	14	42	42	8	36	**$162,201**	Estimated Cost - Task 2					**$284,200**

TABLE 10-1
BUDGET ESTIMATE FOR PROFESSIONAL DESIGN SERVICES FOR CONSOLIDATION OF
CONSOLIDTION OF THE BRACKEN BRAE AND FOREST SPRINGS MUTUAL WATER COMPANIES
San Lorenzo Valley Water District

TASKS	ESTIMATED LABOR (Hours) (1)													TOTAL LABOR COST ($)	OTHER DIRECT COSTS				ESTIMATED COST (2)	
	F&L				PSE			BE	CE&G				AD		UNIT	QNTY	UNIT COST ($)	10% MARKUP ($)	TOTAL COST PER ITEM ($)	SUB TOTALS ($)
	Clerical	Staff Engineer II	Staff Engineer IV	Principal	Staff Engineer	Senior Project Manager	Principal	Principal	Senior Principal Engineer	Senior Geologist	Project Engineer	Senior GIS/CADD Specialist	Principal							
	90	140	160	240	187	240	275	231	319	231	193	165	204							
Task 3: Final Design Phase																				
60% CDs																				
Drawing Preparation		120	16	2	65	20	7	80						$57,196					$57,196	
Specifications	40		40	1	16	5	2	80						$33,461					$33,461	
Constructability Review													10	$2,035					$2,035	
Opinion of Probable Cost			4	1	8	2	1	8					38	$12,712					$12,712	
Internal Review				8										$1,920					$1,920	
Prepare Submittal Package	16	16	4					8						$6,168					$6,168	
Design Review Workshop			4	4		2		2						$2,542					$2,542	
Response to Comments		8	4	1	8	2	1	2						$4,713					$4,713	
90% CDs																				
Drawing Preparation		120	16	2	44	15	5	40						$42,280					$42,280	
Specifications	40		40	1	10	3	1	40						$22,344					$22,344	
Opinion of Probable Cost			4	1	6	1	1	8					38	$12,098					$12,098	
Internal Review				8										$1,920					$1,920	
Prepare Submittal Package	16	16	4					8						$6,168					$6,168	
Design Review Workshop			4	4		2		2						$2,542					$2,542	
Response to Comments		8	4	1	4	2	1	2						$3,965					$3,965	
100% CDs																				
Drawing Preparation		40	16		30	10	3	20						$21,613					$21,613	
Specifications	16		8		6	1	1	16						$8,053					$8,053	
Opinion of Probable Cost		2	1		4	1	1	1					16	$5,190					$5,190	
Internal Review				2										$480					$480	
Prepare Submittal Package (PSE Calculations)	4	4	1		12	4	2	1						$5,064					$5,064	
Design Review Workshop			2	2		2		2						$1,742					$1,742	
Response to Comments		4	1	1	2	1	1	1						$2,080					$2,080	
Bid Package																				
Drawing Preparation		4	2		2	1	1	4						$2,693					$2,693	
Specifications			4		2	1	1	4						$2,453					$2,453	
Opinion of Probable Cost		1	1		2	1	1	1						$1,420					$1,420	
Internal Review				1										$240					$240	
Prepare Submittal Package	4	2						2						$1,102					$1,102	
Santa Cruz County Encroachment Permit																				
Prepare permit application package		16	8	2										$4,000					$4,000	
Respond to Comments (no more than three rounds of comments)		16	4	1										$3,120					$3,120	
Prepare final permit drawings		4	2	1										$1,120					$1,120	
State of California Department of Transportation																				
Prepare permit application package		24	16	1										$6,160					$6,160	
Respond to Comments (no more than three rounds of comments)		24	16	1	8	2	1							$8,411					$8,411	
Prepare final permit drawings		4	1		2	1	1							$1,609					$1,609	
Coordination Allowance				24										$5,760					$5,760	
Subtotal Labor Hours - Task 3	136	433	227	70	231	79	32	332					102	**$294,370**	Estimated Cost - Task 3					**$173,600**

TABLE 10-1
BUDGET ESTIMATE FOR PROFESSIONAL DESIGN SERVICES FOR CONSOLIDATION OF
CONSOLIDTION OF THE BRACKEN BRAE AND FOREST SPRINGS MUTUAL WATER COMPANIES
San Lorenzo Valley Water District

TASKS	ESTIMATED LABOR (Hours) (1)													TOTAL LABOR COST ($)	OTHER DIRECT COSTS				ESTIMATED COST (2)	
	F&L				PSE			BE	CE&G				AD		UNIT	QNTY	UNIT COST ($)	10% MARKUP ($)	TOTAL COST PER ITEM ($)	SUB TOTALS ($)
	Clerical	Staff Engineer II	Staff Engineer IV	Principal	Staff Engineer	Senior Project Manager	Principal	Principal	Senior Principal Engineer	Senior Geologist	Project Engineer	Senior GIS/CADD Specialist	Principal							
	90	140	160	240	187	240	275	231	319	231	193	165	204							
Task 4: Bidding Phase																				
Prepare for and attend one prebid meeting		8	4											$1,760					$1,760	
Review Bidder Questions and Coordinate with District		4	2	1	8	2	1	2						$3,833					$3,833	
Response to Bidder Questions		8	2		12	4	1	2						$5,380					$5,380	
Preparation of One Addendum		16	4		5	2	1	4						$5,494					$5,494	
Internal Review				2										$480					$480	
Coordination Allowance				4										$960					$960	
Subtotal Labor Hours - Task 4		36	12	7	25	8	3	8						**$17,906**	Estimated Cost - Task 4					**$17,900**
Task 5: Construction Phase																				
Submittal Review																				
F&L: 40 submittals (2 hours per submittal plus QC)		80	16											$13,760					$13,760	
PSE: 28 submittals (2 hours per submittal plus QC)					40	12	4							$11,458					$11,458	
BE: 20 submittals (3 hours per submittal plus QC)								60						$13,860					$13,860	
Request for Information Review																				
F&L: 20 RFIs (2 hours per submittal plus QC)		40	16											$8,160					$8,160	
PSE: 16 RFIs (2 hours per submittal plus QC)					24	6	2							$6,477					$6,477	
BE: 10 RFIs (4 hours per submittal plus QC)								40						$9,240					$9,240	
Prepare Design Clarifications																				
F&L: 8 Design Clarifications (4 hours per clarification plus QC)		32	16											$7,040					$7,040	
PSE: 8 Design Clarifications (2 hours per clarification plus QC)					12	3	1							$3,238					$3,238	
BE: 6 Design Clarifications (6 hours per clarification plus QC)								36						$8,316					$8,316	
Change Order Review Technical Support (Allowance)			24	8	24	4	2							$11,757					$11,757	
Site Visit																				
F&L: Up to five site visits		40	16											$8,160					$8,160	
PSE: 2 site visits						16								$3,837	Day	2	$600	$60	$5,097	
BE: Three site visits								36						$8,316					$8,316	
Prepare record drawings		24	16		6	2	2	24						$13,616					$13,616	
Coordination Allowance				24				16						$9,456					$9,456	
Subtotal Labor Hours - Task 5		216	104	32	106	43	11	212						**$136,690**	Estimated Cost - Task 5					**$138,000**
Total Labor Hours	**152**	**1105**	**559**	**202**	**396**	**155**	**53**	**624**	**14**	**42**	**42**	**8**	**138**	**$627,896**	**Total Estimated Cost**					**$751,100**

Notes to Table:
(1) Billing rates for subconsultants includes 10% markup.
(2) Estimated costs are rounded to the nearest $100.

FREYER & LAURETA, INC.

CIVIL ENGINEERS • SURVEYORS • CONSTRUCTION MANAGERS

CHARGE RATE SCHEDULE

Effective 1/1/22

Professional and technical services of Freyer & Laureta, Inc. Staff are provided on a fixed fee or an hourly rate basis as follows:

FIXED FEE

Where a definitive scope of work can be established, many of our clients prefer that a specific fee be agreed upon in advance. Billings are submitted monthly based upon percent complete as of the last accounting day of the month.

HOURLY RATE

Applicable to Plan Preparation, Design and Report services where the scope of work must remain open. Freyer & Laureta, Inc. utilizes the following hourly charge rate basis for billing purposes.

Production Aide - Clerical	$ 90.00
Drafter I - Technical Typist - Survey Tech II	$ 95.00
Drafter II - Word Processor	$ 100.00
Engineering Tech I - Drafter III	$ 115.00
Staff Engineer I - Engineering Tech II - Survey Tech III	$ 135.00
Staff Engineer II - Engineering Tech III - Survey Tech IV	$ 140.00
Staff Engineer III - Senior Engineering Tech	$ 145.00
Staff Engineer IV - Survey Tech V – Construction Inspector	$ 160.00
Associate Engineer - Associate Surveyor (L.L.S.)	$ 175.00
Senior Engineer - Construction Manager	$ 185.00
Senior Construction Inspector	$ 185.00
Project Manager – Principal Surveyor (L.L.S.)	$ 200.00
Senior Project Manager – Principal Surveyor (L.L.S)	$ 215.00
Associate Principal	$ 225.00
Principal	$ 240.00
Forensic Engineering	$ 330.00
Deposition and Court Appearance	$ 415.00

Subconsultant, Reproduction, Printing, Travel, Mailing and Delivery - Cost plus 10%

Interest Charge - Billings are due and payable within 30 days. A monthly interest charge equal to the Federal Discount Rate plus 5% will be applied on the next billing beyond the 30-day payment period.

The foregoing Charge Rate Schedule is incorporated into the Agreement for the Services of Freyer & Laureta, Inc. and may be updated annually.

Proposed Project Schedule
Bracken Brae and Forest Springs Mutal Water Companies Consolidation Project
San Lorenzo Valley Water District

ID	Task Name	Duration	Start	Finish	Predecessors
1	**Bracken Brae and Forest Springs Consolidation Project**	**467 days**	**Mon 3/7/22**	**Tue 12/19/23**	
2	Board Approval	0 days	Mon 3/7/22	Mon 3/7/22	
3	Notice to Proceed	0 days	Mon 3/7/22	Mon 3/7/22	2
4	Task 1: Project Management	357 days	Mon 8/8/22	Tue 12/19/23	3,79FF
5	**Task 2: Preliminary Design**	**103 days**	**Mon 3/7/22**	**Wed 7/27/22**	
6	Topographic Survey	40 days	Mon 3/14/22	Fri 5/6/22	3FS+5 days
7	Existing Utility Research	5 days	Mon 3/7/22	Fri 3/11/22	3
8	Prepare Base Maps	5 days	Mon 5/9/22	Fri 5/13/22	6
9	Utility Potholing	5 days	Mon 5/23/22	Fri 5/27/22	8,11SS+5 days,7
10	**Basis of Design Report**	**83 days**	**Mon 3/7/22**	**Wed 6/29/22**	
11	Prepare drawings	20 days	Mon 5/16/22	Fri 6/10/22	8,6FF,12,13,14
12	Develop alternative tank options	30 days	Mon 3/7/22	Fri 4/15/22	3
13	Develop alternative pump station options	30 days	Mon 3/7/22	Fri 4/15/22	3
14	Develop pipeline alignment alternatives	30 days	Mon 3/7/22	Fri 4/15/22	3
15	Prepare opinion of probable cost	10 days	Mon 5/30/22	Fri 6/10/22	11FF,13
16	Prepare preliminary construction schedule	10 days	Mon 5/30/22	Fri 6/10/22	15SS
17	Prepare internal draft report	20 days	Mon 5/30/22	Fri 6/24/22	11SS+10 days,15F
18	Internal Review	2 days	Mon 6/27/22	Tue 6/28/22	17
19	Prepare final draft report	1 day	Wed 6/29/22	Wed 6/29/22	18
20	Submit Draft Basis of Design Report	0 days	Wed 6/29/22	Wed 6/29/22	19
21	District Review	10 days	Thu 6/30/22	Wed 7/13/22	20
22	Basis of Design Report Workshop	0 days	Wed 7/13/22	Wed 7/13/22	21
23	Prepare Final Basis of Design Workshop	10 days	Thu 7/14/22	Wed 7/27/22	22
24	**Task 3: Final Design**	**129 days**	**Thu 7/14/22**	**Tue 1/10/23**	
25	**Prepare 60% Construction Documents**	**46 days**	**Thu 7/14/22**	**Thu 9/15/22**	
26	Prepare drawings	30 days	Thu 7/14/22	Wed 8/24/22	22
27	Prepare specifications	15 days	Thu 8/4/22	Wed 8/24/22	26FF
28	Update opinion of probable cost	5 days	Thu 8/18/22	Wed 8/24/22	26FF
29	Internal review	5 days	Thu 8/25/22	Wed 8/31/22	26,27,28
30	Prepare 60% Design Submittal	1 day	Thu 9/1/22	Thu 9/1/22	29
31	Submit 60% Design	0 days	Thu 9/1/22	Thu 9/1/22	30
32	District Review	10 days	Fri 9/2/22	Thu 9/15/22	31
33	60% Submittal Design Review Workshop	0 days	Thu 9/15/22	Thu 9/15/22	32
34	**Prepare 90% Construction Documents**	**42 days**	**Fri 9/16/22**	**Mon 11/14/22**	
35	Prepare drawings	30 days	Fri 9/16/22	Thu 10/27/22	33
36	Prepare specifications	15 days	Fri 10/7/22	Thu 10/27/22	35FF
37	Update opinion of probable cost	1 day	Thu 10/27/22	Thu 10/27/22	35FF
38	Internal review	1 day	Fri 10/28/22	Fri 10/28/22	37,35,36
39	Prepare 90% Design Submittal	1 day	Mon 10/31/22	Mon 10/31/22	38,23
40	Submit 90% Design	0 days	Mon 10/31/22	Mon 10/31/22	39

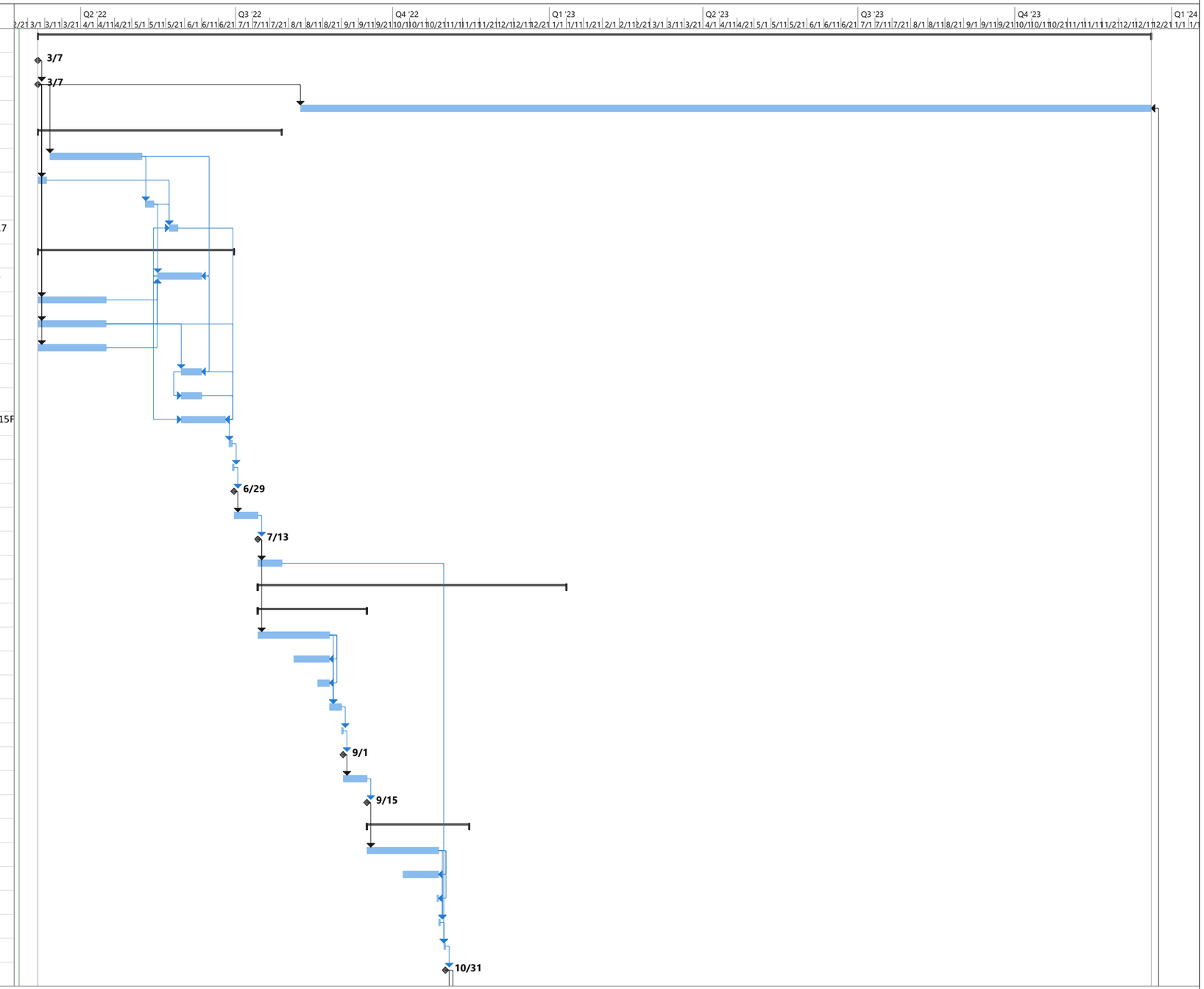

Project: Schedule_2021CIPPipel
Date: Thu 2/24/22

Task | Split | Milestone | Summary | Project Summary | Inactive Task | Inactive Milestone | Inactive Summary | Manual Task | Duration-only | Manual Summary Rollup | Manual Summary | Start-only | Finish-only | External Tasks | External Milestone | Deadline | Progress | Manual Progress

Proposed Project Schedule
Bracken Brae and Forest Springs Mutal Water Companies Consolidation Project
San Lorenzo Valley Water District

ID	Task Name	Duration	Start	Finish	Predecessors
41	District Review	10 days	Tue 11/1/22	Mon 11/14/22	40
42	90% Submittal Design Review Workshop	0 days	Mon 11/14/22	Mon 11/14/22	41
43	**Prepare 100% Construction Documents**	**27 days**	**Tue 11/15/22**	**Wed 12/21/22**	
44	Prepare drawings	15 days	Tue 11/15/22	Mon 12/5/22	42
45	Prepare specifications	10 days	Tue 11/22/22	Mon 12/5/22	44FF
46	Update opinion of probable cost	1 day	Mon 12/5/22	Mon 12/5/22	44FF
47	Internal review	1 day	Tue 12/6/22	Tue 12/6/22	44,45,46
48	Prepare 100% Design Submittal	1 day	Wed 12/7/22	Wed 12/7/22	47
49	Submit 100% Design	0 days	Wed 12/7/22	Wed 12/7/22	48
50	District Review	10 days	Thu 12/8/22	Wed 12/21/22	49
51	100% Submittal Design Review Workshop	0 days	Wed 12/21/22	Wed 12/21/22	50
52	**Prepare Final Bid Documents**	**14 days**	**Thu 12/22/22**	**Tue 1/10/23**	
53	Prepare draft bid package	5 days	Thu 12/22/22	Wed 12/28/22	51
54	Internal Review	1 day	Thu 12/29/22	Thu 12/29/22	53
55	Prepare final draft bid package	1 day	Fri 12/30/22	Fri 12/30/22	54
56	Submit final draft bid package	0 days	Fri 12/30/22	Fri 12/30/22	55
57	District review	5 days	Mon 1/2/23	Fri 1/6/23	56
58	Prepare final bid package	2 days	Mon 1/9/23	Tue 1/10/23	57
59	District issues bid package	0 days	Tue 1/10/23	Tue 1/10/23	58
60	**County of Santa Cruz Encroachment Permit**	**55 days**	**Tue 10/18/22**	**Mon 1/2/23**	
61	Prepare application including attachments	10 days	Tue 10/18/22	Mon 10/31/22	40FF
62	Submit application to County	0 days	Mon 10/31/22	Mon 10/31/22	61
63	County Review	20 days	Tue 11/1/22	Mon 11/28/22	62
64	Revie and respond to County comments	5 days	Tue 11/29/22	Mon 12/5/22	63
65	Submit revised application to County	0 days	Mon 12/5/22	Mon 12/5/22	64
66	County Review	20 days	Tue 12/6/22	Mon 1/2/23	65
67	County Issue Encroachment Permit	0 days	Mon 1/2/23	Mon 1/2/23	66
68	**Task 4: Bidding Phase**	**25 days**	**Wed 1/11/23**	**Tue 2/14/23**	
69	Bid Period	20 days	Wed 1/11/23	Tue 2/7/23	59
70	Prebid Meeting	0 days	Tue 1/24/23	Tue 1/24/23	69SS+10 days
71	Bids Received	0 days	Tue 2/7/23	Tue 2/7/23	70,69
72	Bid Review	5 days	Wed 2/8/23	Tue 2/14/23	71
73	District Board Approve Construction Contract	0 days	Tue 2/14/23	Tue 2/14/23	72
74	**Task 5: Construction Phase**	**220 days**	**Wed 2/15/23**	**Tue 12/19/23**	
75	Prepare Construction Agreement	10 days	Wed 2/15/23	Tue 2/28/23	73
76	Issue Notice to Proceed	0 days	Tue 2/28/23	Tue 2/28/23	75
77	Submittal Review Period	20 days	Wed 3/1/23	Tue 3/28/23	76
78	Field Work	190 days	Wed 3/29/23	Tue 12/19/23	77,67
79	Substantial Completion	0 days	Tue 12/19/23	Tue 12/19/23	78

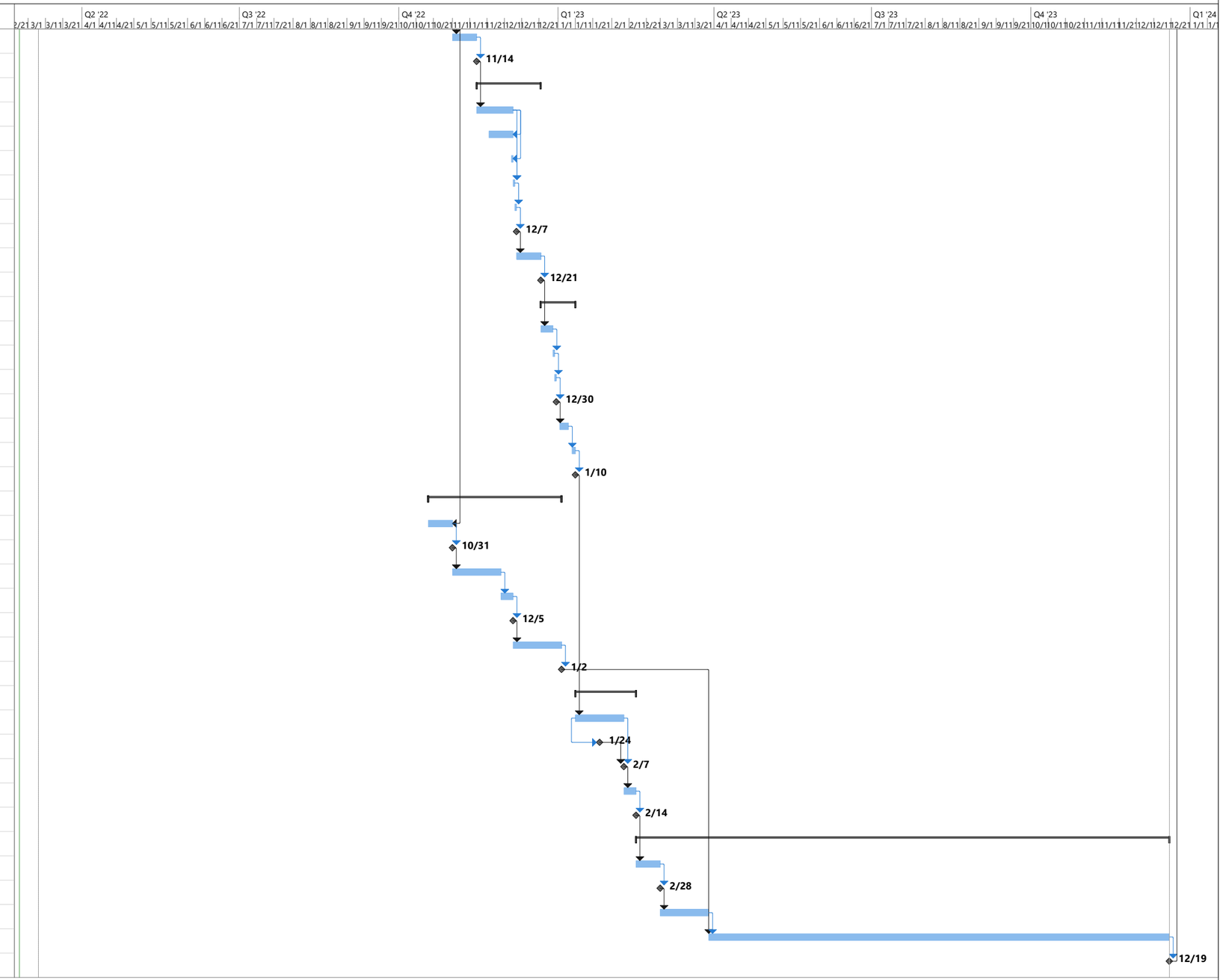

Project: Schedule_2021CIPPipel
Date: Thu 2/24/22

Task | Split | Milestone | Summary | Project Summary | Inactive Task | Inactive Milestone | Inactive Summary | Manual Task | Duration-only | Manual Summary Rollup | Manual Summary | Start-only | Finish-only | External Tasks | External Milestone | Deadline | Progress | Manual Progress